ENEA Ricerca Sistema Elettrico	Sigla di identificazione	Distrib.	Pag.	di
	NNFISS – LP2 -072	L	1	109

Titolo

Feasibility study for the execution of a boron dilution test on the SPES-2 facility

Ente emittente SIET

PAGINA DI GUARDIA

Descrittori

Tipologia del documento: Rapporto Tecnico

Collocazione contrattuale: Accordo di programma ENEA-MSE: tema di ricerca "Nuovo nucleare da fissione"

Argomenti trattati: Reattori e sistemi innovativi
Sicurezza Nucleare
Analisi incidentale

Sommario

This report has been issued in the frame of the ENEA and MSE research program on "Nuovo Nucleare da fissione". It is the deliverable D4-a of the task LP2 of the work program PAR-2011 "Adeguamento dello SPES2 per prove di sicurezza".
The document deals with all the administrative and maintenance activities to be performed on the SPES-2 facility at SIET, in SPES-99 configuration, to simulate a boron dilution test, counterpart of the OECD-PKL E2.2 executed on the AREVA NP PKL facility.
All the aspects to restart the facility, after 13 years inactivity have been considered, in particular the procedures to accomplish the PED requirements and the operations to refurbish the power channel, all other components, auxiliary systems, instrumentation and data acquisition system.
Specific modification to the loops have been defined to allow the simulation of the above said boron dilution test.
If the test will be performed, data of international interest for best-estimate code qualification will be recorded in the SPES-2 facility.

Note

Copia n.			In carico a:			
2			NOME			
			FIRMA			
1			NOME			
			FIRMA			
0	EMISSIONE	11/09/2012	NOME	C. Lombardo		P. Meloni
			FIRMA			
REV.	DESCRIZIONE	DATA		CONVALIDA	VISTO	APPROVAZIONE

SIET sperimentiamo le tue idee			**EMITTENTE** *issued by* **Unità di Produzione (Sezione Ingegneria)** *Production Unit (Engineering Section)*	
CLIENTE: *client* **ENEA**	**COMMESSA:** *Job* 1PN00TBD10608		**DISCO:** *disk*	**PAGINA:** *page* **1** **DI:** *of* **108**
IDENTIFICATIVO: *document* **01 878 RT 12**			**Classe Ris.:** *confidentiality*	**Allegati:** *enclosures*
TITOLO: *title*	Feasibility study for the execution of a boron dilution test on the SPES-2 facility			
REDATTORI: *prepared by*	**R. Ferri, A. Achilli, C. Congiu**			
SOMMARIO *abstract*				
LISTA DI DISTRIBUZIONE *distribution list*				
0	2012-08-30	ISSUE	R. Ferri A. Achilli C. Congiu	A. Achilli
REV. *rev.*	DATA *date*	DESCRIZIONE *description*	REDAZIONE *prepared by*	APPROVAZIONE *approved by*

Informazioni strettamente riservate di proprietà SIET SpA - Da non utilizzare per scopi diversi da quelli per cui sono state fornite.
Confidential information property of SIET SpA - Not to be used for any purpose other than those for which it is supplied.

CONTENT

LIST OF TABLES **4**

LIST OF FIGURES **5**

NOMENCLATURE **6**

1 SCOPE **7**

2 INTRODUCTION **8**

3 THE SPES-2 FACILITY IN THE SPES-99 CONFIGURATION **9**

3.1 THE PRIMARY SYSTEM 9
3.1.1 The RPV *9*
3.1.2 The primary loop piping *10*
3.1.3 The Pressurizer *11*
3.1.4 The coolant pumps *11*
3.2 THE SAFETY SYSTEMS 11
3.2.1 The Accumulators *11*
3.2.2 The pressurizer and steam generator PORV *11*
3.3 THE SECONDARY SYSTEM 12
3.3.1 The Steam Generators *12*
3.3.2 The secondary loop piping *12*
3.4 THE AUXILIARY SYSTEMS 12
3.4.1 The main feedwater pre-heating system *13*
3.4.2 The steam condensing and discharge system *13*
3.4.3 The power supply systems *13*
3.4.4 The steam auxiliary system *13*
3.4.5 The water auxiliary systems *13*
3.4.6 The air auxiliary systems *13*
3.5 SPES FACILITY OPERATION TIME 14

4 SPES-2 FACILITY CONFORMITY TO THE EUROPEAN PRESSURE EQUIPMENT DIRECTIVE **58**

4.1 THE EUROPEAN PRESSURE EQUIPMENT DIRECTIVE 58
4.2 SPES-2 POWER CHANNEL SAFETY EVALUATION 58
4.3 SPES-2 PRESSURE TANK INTEGRITY VERIFICATION 59
4.4 SPES-2 PIPING SAFETY EVALUATIONS 59
4.4.1 Overview on Autopipe verifications based on UNI EN 13480 standard *59*
4.4.2 Piping modelling criteria *62*
4.4.3 Hot and cold leg safety evaluation *62*
4.4.4 Pump suction pipe safety evaluation *63*
4.4.5 PRZ surge line safety evaluation *63*
4.4.6 The DVI lines and the accumulator injection lines safety evaluation *63*
4.4.7 The steam line safety evaluation *63*
4.4.8 The feedwater line safety evaluation *63*
4.4.9 Safety evaluation conclusions *63*

5 SPES-2 FACILITY SPECIAL MAINTENANCE ACTIVITIES **84**

5.1 POWER CHANNEL 84
5.1.1 Electric connection dismantling *84*
5.1.2 Rod bundle extraction *85*
5.1.3 Shell disassembly at flanged coupling and klingerit 400 gasket removal *85*
5.1.4 Shell element inspection and non destructive tests *85*
5.1.5 Heater rod check and existing cladding thermocouple removal *85*
5.1.6 New wall thermocouple installation *85*
5.1.7 Rod leakage tests *86*
5.1.8 Shell re-assembly with new type gaskets and new coned disk springs *86*
5.1.9 Tubular downcomer expansion joint modification *86*
5.2 STEAM GENERATORS 87
5.3 PRESSURIZER 87
5.4 ACCUMULATORS 87

5.5 PRIMARY AND SECONDARY LOOP PIPING 87
5.5.1 Hot legs and cold legs *87*
5.5.2 Pump suction pipes *87*
5.5.3 PRZ surge line *87*
5.5.4 The DVI lines *87*
5.5.5 The accumulator injection lines *87*
5.5.6 The steam lines *88*
5.5.7 The feedwater lines *88*
5.6 PRIMARY COOLANT PUMPS AND SEALING SYSTEM 88
5.7 AUXILIARY SYSTEMS 88
5.7.1 Feedwater pre-heating *88*
5.7.2 Steam condensing and discharge system *88*
5.7.3 Power supply systems *88*
5.7.4 Steam auxiliary system *88*
5.7.5 Water auxiliary systems *89*
5.7.6 Air supply auxiliary system *89*
5.8 OTHER WORKS 89
5.8.1 Thermal insulation *89*
5.8.2 Valves *89*
5.8.3 Load bearing structure *89*
5.9 INSTRUMENTATION 89
5.10 DATA ACQUISITION AND CONTROL SYSTEM 89
5.11 CONTROL ROOM 89

6 SPES-2 FACILITY SET-UP FOR THE BORON DILUTION TEST 99

6.1 THE BORON DILUTION TRANSIENT 99
6.2 TEST BOUNDARY AND INITIAL CONDITIONS 99
6.3 MAIN MODIFICATIONS TO SPES-2 FACILITY FOR BORON DILUTION TRANSIENT SIMULATION 99
6.3.1 Borated water drain and injection systems *99*
6.3.2 Concentration measurements *100*
6.4 CONSIDERATIONS ON POSSIBLE ELECTROLYSIS EFFECTS 101

7 CONCLUSIONS 107

8 REFERENCES 108

LIST OF TABLES

Tab.3. 1 – SPES-2 primary system component materials 15
Tab.3. 2 – SPES-2 power channel: main characteristics 16
Tab.3. 3 – SPES-2 power channel: main data 17
Tab.3. 4 – SPES-2 rod bundle: main data 18
Tab.3. 5 – SPES-2 pressurizer: main characteristics 19
Tab.3. 6 – SPES-2 primary coolant pumps: main characteristics 20
Tab.3. 7 – SPES-2 accumultors: main characteristics 21
Tab.3. 8 – SPES-2 steam generator: main characteristics 22
Tab.3. 9 – SPES-2 steam generator U-tubes: main characteristics 23

Tab.4. 1 – SPES-2 pressure tank register 64
Tab.4. 2 – Hot legs and cold legs safety evaluation results at verified conditions 65
Tab.4. 3 – Hot legs and cold legs safety evaluation results at SPES-2 design condition 66
Tab.4. 4 – Pump suction pipes safety evaluation results 67
Tab.4. 5 – PRZ surge line safety evaluation results 68
Tab.4. 6 – Accumulator injection lines and DVI lines safety evaluation results 69
Tab.4. 7 – Main steam line-A safety evaluation results at verified conditions 70
Tab.4. 8 – Main steam line-A safety evaluation results at design conditions 71
Tab.4. 9 – Main steam line-B safety evaluation results at design conditions 72
Tab.4. 10 – Main feedwater lines safety evaluation results at verified conditions 73
Tab.4. 11 – Main feedwater lines safety evaluation results at design conditions 74

Tab.6. 1 – SPES-2 boron dilution experiment: expected phenomenological sequence 103
Tab.6. 2 – SPES2 experiment: boundary and initial conditions 103

LIST OF FIGURES

Fig.3. 1 – SPES-99 facility scheme ... 24
Fig.3. 2 – SPES-99 flow diagram ... 25
Fig.3. 3 – SPES-99 instrumentation diagram ... 26
Fig.3. 4 – SPES-2 power channel: general view ... 27
Fig.3. 5 – SPES-2 power channel: Lower Plenum ... 28
Fig.3. 6 – SPES-2 power channel: Riser section active zone ... 29
Fig.3. 7 – SPES-2 power channel: Upper Plenum ... 30
Fig.3. 8 – SPES-2 power channel: Upper Head ... 31
Fig.3. 9 – SPES-2 power channel: lower plenum sealing system ... 32
Fig.3. 10 – SPES-2 power channel: tubular downcomer ... 33
Fig.3. 11 – SPES-2 power channel: upper power plate ... 34
Fig.3. 12 – SPES-2 power channel: downcomer – upper head bypass ... 35
Fig.3. 13 – SPES-2 power channel: separation plate ... 36
Fig.3. 14 – SPES-2 power channel: heater rod ... 37
Fig.3. 15 – SPES-2 power channel: rod bundle spacer grid ... 38
Fig.3. 16 – SPES-2 Hot Leg-A layout ... 39
Fig.3. 17 – SPES-2 Hot Leg-B layout ... 40
Fig.3. 18 – SPES-2 Cold Leg-A layout ... 41
Fig.3. 19 – SPES-2 Cold Leg-B layout ... 42
Fig.3. 20 – SPES-2 Pump-A suction pipe ... 43
Fig.3. 21 – SPES-2 Pump-B suction pipe ... 44
Fig.3. 22 – SPES-2 Pressurizer surge line layout ... 45
Fig.3. 23 – SPES-2 DVI-A and DVI-B line layout ... 46
Fig.3. 24 – SPES-2 Accumulator injection line layout ... 47
Fig.3. 25 – SPES-2 pressurizer ... 48
Fig.3. 26 – SPES-2 Accumulators ... 49
Fig.3. 27 – SPES-2 Steam Generator ... 50
Fig.3. 28 – SPES-2 Steam Generator U-tubes ... 51
Fig.3. 29 – SPES-2 Main steam line-A ... 52
Fig.3. 30 – SPES-2 Main steam line-B ... 53
Fig.3. 31 – SPES-2 Main steam line header ... 54
Fig.3. 32 – SPES-2 Main feedwater line-A ... 55
Fig.3. 33 – SPES-2 Main feedwater line-B ... 56
Fig.3. 34 – SPES-2 Main feedwater line header ... 57

Fig.4. 1 – SPES-2 pressure tank numbering ... 75
Fig.4. 2 – FEM analysis on SPES-2 power channel parts ... 76
Fig.4. 3 – Hot legs and cold legs model for safety evaluation ... 77
Fig.4. 4 – Pump suction pipes model for safety evaluation ... 78
Fig.4. 5 – PRZ surge line model for safety evaluation ... 79
Fig.4. 6 – Accumulator injection lines and DVI lines model for safety evaluation ... 80
Fig.4. 7 – Steam line-A model for safety evaluation ... 81
Fig.4. 8 – Steam line-B model for safety evaluation ... 82
Fig.4. 9 – Feedwater lines model for safety evaluation ... 83

Fig.5. 1 – SPES-2 heater rod lower termination ... 90
Fig.5. 2 – SPES-2 heater rod upper termination ... 91
Fig.5. 3 – Heater rod re-instrumentation ... 92
Fig.5. 4 – Gaskets position at the power channel flanged couplings ... 93
Fig.5. 5 – Gasket details a the power channel flanged couplings ... 94
Fig.5. 6 – Phlogopite mica gasket test section assembly ... 95
Fig.5. 7 – Phlogopite mica gasket after testing ... 96
Fig.5. 8 – Tubular downcomer bellow joint operating scheme ... 97
Fig.5. 9 – Tubular downcomer bellow joint operating scheme upgrade ... 98

Fig.6. 1 - Scheme of de-borated water slug formation ... 104
Fig.6. 2 – Voltage along the power channel elevation ... 104
Fig.6. 3 – Scheme of the power channel equivalent electrolytic cell ... 105
Fig.6. 4 – SPES-99 flow diagram modified for the boron dilution test ... 106

NOMENCLATURE

A	Area
ACC	Accumulator
ADS	Automatic Depressurization System
ASL	Azienda Sanitaria Locale (Local health institute)
b	distance
CL	Cold Leg
CMT	Core Make-up Tank
CVCS	Chemical and Volume Control System
DAS	Data Acquisition System
DC	DownComer
DVI	Direct Vessel Injection
EFW	Emergency Feed Water
FEM	Finite Element Method
FL	Feed Line
FW	Feed Water
Fp	Force due to pressure
Fs	Force due to springs
HL	Hot Leg
IB	Intermediate Break
INAIL	Istituto Nazionale per l'Assicurazione contro gli Infortuni sul Lavoro (National Institute for Insurance against Industrial Injuries)
IRWST	In-containment Refuelling Water Storage Tank
ISPESL	Istituto Superiore Prevenzione e Sicurezza sul Lavoro (Italian institute for work accident prevention and security)
LOCA	Loss Of Coolant Accident
LOFW	Loss Of Feed Water
Mf	Bending moment
MFW	Main Feed Water
MS	Main Steam
MSE	Ministero dello Sviluppo Economico (Ministry of economic development)
NRHR	Normal Residual Heat Removal
NPP	Nuclear Power Plant
P	Pressure
PC	Power Channel
PCP	Primary Coolant Pump
PED	Pressure Equipment Directive
PORV	Power Operated Relief Valve
PRZ	Pressurizer
PS	Design Pressure
PUN	Progetto Unificato Nucleare (Nuclear unified project)
PWR	Pressurized Water Reactor
RPV	Reactor Pressure Vessel
SB	Small Break
SFW	Safety Feed Water
SG	Steam Generator
SL	Steam Line
SLB	Steam Line Break
SIET	Società Informazioni Esperienze Termoidrauliche (Company for information on thermal-hydraulic tests)
SPES	Simulatore Pressurizzato per Esperienze di Sicurezza (pressurized simulator for safety tests)
SUS	SUStained mechanical loads
SGTR	Steam Generator Tube Rupture
US-NRC	United States Nuclear Regulatory Commission

1 SCOPE

The primary goal of this document is to describe the activities carried-out at SIET to verify the possibility of using the SPES-2 facility, in SPES-99 test configuration (i.e. without the AP-600 typical safety systems) for performing a boron dilution test, counterpart of the OECD-PKL E2.2 executed on the AREVA NP PKL facility.

2 INTRODUCTION

The SPES Integral Test Facility was built in the early '80s, at SIET laboratories, to simulate the PWR-PUN, Westinghouse 312 type-reactor.

In the early '90s, the facility was upgraded into SPES-2 to simulate the Westinghouse AP-600 reactor and support its design licensing by the US-NRC.

SPES-2 simulates the whole primary circuit, the relevant parts of the two secondary circuits, up to the main isolation valves, and the passive safety systems typical of the AP-600.

In 1999, in order to verify the SPES-2 facility operability after five years of inactivity, an IBLOCA test was performed in the so-called SPES-99 configuration, where all the AP-600 typical safety systems were excluded.

Experimental data obtained on the SPES facility, in all its configurations, were used both for system behaviour investigation and thermal-hydraulic code validation at national and international level.

Safety aspects of nuclear power plants have been object of an increasing worldwide interest since 2000, due to the necessity of validating best-estimate codes to be used for more reliable NPP performance evaluations and safety analyses, in order to prevent or cope with the largest spectrum of accidental scenarios.

In this context, ENEA, owner of the SPES-2 facility, is interested in proposing the facility in international programs on advanced LWR safety, for studying the boron dilution issues in conditions of reduced mass inventory, e.g. after a SBLOCA event, which are of relevant importance in the nuclear reactor safety [1] [2] [3]. The boron dilution takes place when conditions for reflux-condenser phenomenon are established in the plant. This phenomenon produces de-borated water plug in the primary circuit, namely in the loop seals.

The F1.2 test, performed on the PKL integral test facility at AREVA NP centre in Erlangen, Germany, was identified as the reference test to perform a counterpart test on the SPES-2 facility. It was devoted to investigate the boron distribution inside the facility related to the residual mass inventory and natural circulation in the vessel. In particular, the main relevant aspect of the test was the boron distribution during the transition between the reflux-condenser conditions to natural circulation conditions, with attention to the low borated slugs of water accumulated in the loop seals [2] [3].

The SPES-2 facility is inactive since 1999, and ENEA committed SIET a feasibility study to investigate the possibility to restart it and perform a boron dilution test counterpart to PKL-F1.2 one.

This document describes the identified critical points, activities and steps necessary to re-start the SPES-2 facility, in the SPES-99 configuration, to make it suitable to perform the specified test.

3 THE SPES-2 FACILITY IN THE SPES-99 CONFIGURATION

The SPES-99 facility was obtained by a modification of SPES-2 with the exclusion of all the passive safety systems typical of the Westinghouse AP-600 reactor. A scheme of the simplified facility is reported in Fig.3. 1. It includes: the pressure vessel (RPV), the primary circulation pumps (PCP), the pressurizer (PRZ), the steam generators (SG) and the accumulators (ACC) as the only foreseen safety systems. The flow diagram of SPES-99 facility is reported in Fig.3. 2. The SPES-99 instrumentation diagram is reported in Fig.3. 3.
The SPES2-facility is described in detail in [4] and its '99 configuration is reported in [5]. This document reports a short description and the data of components, which are relevant to the present work and require special attention before the re-start.

3.1 The primary system

The primary system includes the pressure vessel with the electrically heated rods, the loop piping, the pressurizer, the U-tube SGs and the coolant pumps. The primary system component materials are reported in Tab.3. 1.

3.1.1 The RPV

The SPES-2 facility power channel was set-up by modifying the existing SPES RPV. In particular, the core elevation and power level were changed as well as the lower plenum, upper plenum and upper head.

3.1.1.1 Power channel shell

The general view of the SPES-2 power channel is reported in Fig.3. 4 while the main characteristics and data are summarized in Tab.3. 2 and Tab.3. 3.

It consists of:

- the lower plenum, Fig.3. 5;
- the riser, including the rod bundle active zone, Fig.3. 6;
- the upper plenum, including the annular downcomer, Fig.3. 7;
- the upper head, Fig.3. 8.

The lower plenum contains the sealing system for the lower end of the rod bundle which protrudes outside the power channel bottom, Fig.3. 9.

The power channel riser includes the core by-pass lower nozzle (not used in SPES-2) and also the inlet nozzle of the tubular downcomer. The tubular downcomer, Fig.3. 10, enters the lower plenum in an annular section that simulates the AP-600 riser inlet conditions.

The power channel active zone has an inside octagonal cross section and it is built by assembling eleven flanged sections. Electrical insulation among flanges and fluid sealing are guaranteed by "klingerit 400" gaskets. Loose flanged sections are thermally insulated by klingerit rings and sleeves to reduce heat losses from the power channel walls and reduce metal heat input to the fluid.

At the top of the riser section, the rod bundle upper power plate, Fig.3. 11, is contained between the flanges connecting the active zone to the upper plenum. Such plate also serves as support plate for the bundle rods.

The upper plenum contains the upper nozzle of the core by-pass (not used in SPES2) and the two hot leg nozzles. An annular downcomer is provided around a portion of the upper plenum region. It houses four cold leg nozzles, two hot leg nozzles, two DVI line nozzles, the lower nozzle of the downcomer – upper head bypass, Fig.3. 12, which upper connection is on the power channel upper head, and the outlet nozzle of the tubular downcomer. Devices like fins and dividing baffles are inserted in the annular space and inner tube, respectively, for the simulation of AP-600 pressure drops and flow distribution at the hot legs. Independent thermal expansion between the internal annulus and the vessel body is allowed by two "C" shaped rings installed at the bottom and top of the annulus.

The upper head extends from the bottom of the drilled plate, Fig.3. 13, simulating the AP-600 upper support plate, up to the power channel top. It contains the nozzle of the downcomer-upper head bypass upper connection.

3.1.1.2 Rod bundle

The power channel active zone consists of an electrically heated bundle with 97 rods, geometry (rod diameter, length and pitch) and active length as in AP-600.

The main feature of SPES-2 core are summarized in Tab.3. 4. The rods, shown in Fig.3. 14, are screwed, at their top, to the support plate, Fig.3. 11, which also acts as power distributor, and are kept fastened and properly spaced by eleven spacer grids, Fig.3. 15, which are located: one in the upper unheated zone, seven in the active zone and three in the lower unheated zone.

The rods are directly heated by Joule effect, with the positive current pole at the bottom and the negative one at the top. The axial power profile is uniform for all the rods. The radial profile is uniform too with the exception of two hot spots, simulated by hot rods with 1.19 peak factor. Nineteen rods are instrumented with a total of 52 thermocouples (K-type, inconel 600 clad, 1 mm OD) brazed on the inner rod clad surface, at different axial location.

3.1.2 The primary loop piping

The document [5] reports the details of the points where blind disks were installed, or valves closed, on the SPES2 piping to obtain the SPES-99 configuration.
The sections below describe the active piping in the SPES-99 facility configuration.

3.1.2.1 Hot Legs and Cold Legs

The main primary system loop piping consists of two hot legs and four cold legs (two for each loop), connecting the power channel to the steam generators. The HL-A and HL-B layouts are shown in Fig.3. 16 and Fig.3. 17. The CL-A and CL-B layouts are shown in Fig.3. 18 and Fig.3. 19 and the pump suction lines are reported in Fig.3. 20 and Fig.3. 21. The geometrical details of the piping are reported in [4].

3.1.2.2 Pressurizer surge line

The pressurizer surge line is a 1 ½-inch pipe connecting the bottom flange of the pressurizer to the hot leg-A. The surge line layout is shown in Fig.3. 22 and the geometrical details are shown in [4].

3.1.2.3 DVI lines

The Direct Vessel Injection (DVI) lines, in SPE-2, allow the safety systems injection directly into the power channel. In SPES-99 configuration, only the accumulators are foreseen to intervene and water flows through a portion of the DVI lines. A scheme of the DVI lines is reported in Fig.3. 23 and the geometrical details are reported in [4].

3.1.2.4 Accumulator injection lines

The Accumulator injection line layouts are reported in Fig.3. 24 and the geometrical details are shown in [4]. Each accumulators provides injection into the reactor vessel down-comer, directly joining the injection lines from CMT and IRWST to the Direct Vessel Injection lines. Each accumulator discharge line contains a check valve, an isolation valve and an orifice (D = 4.86 mm) to adjust the flow.

3.1.2.5 Break lines

The SPES2 break lines are detailed in [4]. In general, each line is provided with a ball valve and a proper orifice scaling the reference break size area, and it discharges into a catch tank in order to condensate and weigh the mass. In case of DEG break, two break lines are employed, each provided with a ball valve, discharging into separate catch tanks. In such a case, the two lines are maintained independent by a spectacle flange or an isolation valve on the “broken” line.

In SPES-99, the CL B2 break line was modified to simulate a 10-inch equivalent break [5]. The catch tank cooling system was insufficient to condensate all mass outgoing from the break, so it was not measured and driven directly to the discharge.

3.1.3 The Pressurizer

The SPES-2 pressurizer consists of a cylindrical vessel with flanged ends and it contains six immersed-type electric heaters with 16 kW maximum controlled power each. Six electric annular heaters (maximum power 3.8 kW each), installed at different elevations on the outer surface, compensate for the PRZ heat losses to the environment. A safety valve is installed at the pressurizer top with a discharge line to the atmosphere.

The pressurizer is shown in Fig.3. 25 and the main data are reported in Tab.3. 5.

3.1.4 The coolant pumps

Two centrifugal, single stage, horizontal shaft type primary pumps, one per loop, drive primary coolant through the PC and SGs to remove generated heat. The suction line is horizontal, while delivery is vertical, downward oriented. It consists of a 3-inch pipe that splits into two cold legs. A flywheel is provided with an inertia close to the AP-600. Rotational speed can be controlled and variations programmed by means of a motor driven regulator. Pumps can provide proper head and flow for AP-600 nominal condition simulations, prior to transient start, and they can simulate the reactor pump coast-down. The pump characteristics are summarized in Tab.3. 6. Details on pump geometry and head-flowrate, speed-flowrate curves are reported in [4].

The two pumps are connected to common centralized auxiliary systems providing bearing lubrication and sealing flushing. The pump seal is a triple mechanical seal including a double seal and a back-up tandem seal, Tab.3. 6. Such a system guarantees zero-fluid injection into the primary circuit. The inner seal (high pressure seal), installed on the pump shaft between the barrier fluid and the primary fluid, is designed to assure zero-leakage under all normal and transient conditions. The intermediate seal is designed to leak toward the outer seal to reduce wear and heat generation. The outer seal (lower pressure seal) guarantees zero-leakage from the sealing circuit to the environment.

3.2 The safety systems

The accumulators are the only AP-600 safety systems maintained in the SPES-99 configuration.

The pressurizer and steam generator PORVs were also simulated in SPES-99.

3.2.1 The Accumulators

The two SPES-2 accumulators have cylindrical body and hemispherical heads. They are sized to scale the AP-600 accumulator volume and the correct gas over liquid ratio. Compressed air is used in SPES-2 instead of nitrogen. A heater rod is located inside each tank to ensure a nominal water temperature before the transient beginning. The accumulators are shown in Fig.3. 26 and data are summarized in Tab.3. 7. A safety valve is installed on each accumulator.

3.2.2 The pressurizer and steam generator PORV

The pressurizer and steam generator PORVs were simulated in SPES-99 by using the SPES-2 ADS-1 line and valve and by installing new valves with proper orifices on the existing by-pass lines of the original SG PORV. Details are reported in [5].

3.3 The secondary system

The two-loops secondary system simulates the AP-600 one, up to the main feed-water and steam isolation valves. Auxiliary systems allow to pre-heat and feed the SGs with water at proper conditions and to discharge steam [4].

3.3.1 The Steam Generators

The SPES-2 facility has two identical steam generators that allow to transfer thermal power from the primary to the secondary circuits. They consists of the following parts:

- pressure vessel;
- tube bundle;
- steam separator;
- dryers;
- other internals.

The general arrangement of the SGs is shown in Fig.3. 27 and the main characteristics are summarized in Tab.3. 8. Details of the components are reported in [4].

The steam generator primary side consists of a tube bundle and the inlet/outlet plena. The SG bundle includes thirteen (13) inconel-600 U-tubes assembled in a square array, welded to the tube sheet and spaced by seven grids [4]. The SPES-2 SGs are the same as in SPES facility that simulated the PWR-PUN [6]. For that reason, the tube geometry and material is preserved as in AP-600, but the heat transfer surface results about 38% lower than the AP-600 scaled one.

The tube bundle main data are reported in Tab.3. 9 and the geometric characteristics are shown in Fig.3. 28.

3.3.2 The secondary loop piping

The SPES-2 secondary loop piping, in SPES99 configuration, includes the following lines:

- two main steam lines;
- two main feedwater lines;

3.3.2.1 The main steam lines

The main steam lines are 3-inch Sch. 80 pipes each provided with a Venturi meter, a SG safety valve, a SG PORV and a main steam isolation valve. They are shown in Fig.3. 29 and Fig.3. 30 and the geometrical details are reported in [4]. The main steam lines discharge steam into a common steam line header directing steam to the condenser. The main steam line header is shown in Fig.3. 31 and the details are in [4].

3.3.2.2 The main feedwater lines

The main feedwater lines are 1 1/2-inch Sch. 80 pipes each provided with a flow control valve, an orifice nozzle for flow measurement and an isolation valve. They are shown in Fig.3. 32 and Fig.3. 33 and the geometrical details are reported in [4]. The main feedwater lines receive water by a pre-heater, through the main feedwater line header. The main feedwater line header is shown Fig.3. 34 and the details are shown in [4].

3.4 The auxiliary systems

The SPES-2 auxiliary systems include:

- the main feedwater pre-heating system;
- the steam condensing and discharge system;
- the power supply systems;
- the steam auxiliary system;

- the water auxiliary system;
- the air auxiliary system.

Some information on the above listed auxiliary systems are provided in the following. The detailed system specifications are reported in [9].

3.4.1 The main feedwater pre-heating system

The main feedwater pre-heating can be performed, as sketched in Fig.3. 2:

- by using steam for the nearby Piacenza Levante power station, see par. 3.4.4;
- by using steam from the SG steam lines.

In the second case, temperature control is obtained by means of a heat exchanger by-pass line, properly built for SPES-99 configuration, which allows to operate the plant in a completely independent way of outer steam source.

3.4.2 The steam condensing and discharge system

The steam condensing and discharge system includes a condenser and a chimney to atmosphere, Fig.3. 2. For the SPES-99 test, special maintenance was performed to the Po river water intake system, but now it is completely dismantled and cannot be used anymore. A pump with 50 m^3/h flow cools the condenser that removes part of power from SG steam. Being the cooling power insufficient to the complete condensation of steam, part of it is discharged directly to the atmosphere through the chimney.

3.4.3 The power supply systems

Electric power is provided to the SPES-2 facility by means a power supply station including a 14 MVA – 130 / 3 kV transformer, 3 / 380 kV transformers, connecting cables, power centres, high/medium/low voltage switches.

Electric power is provided to the rod bundle by two direct current generators, TAMINI and CGE, able to reach a maximum power of 4 MW and 8 MW, respectively. Both generators, connected in parallel, contribute to the plant full power (5 MW in SPES-99), while the power decay curve, after scram, is provided by TAMINI generator.

3.4.4 The steam auxiliary system

An auxiliary system provides the SPES-2 facility with high pressure superheated steam coming from the Edipower power station. The steam can be used for pre-heating of the main feed water by means steam-water shell and tube heat exchangers. The pipe connecting the power station to the SPES-2 facility is 3” diameter and 350 m long. It is equipped with both isolation and control valves.

3.4.5 The water auxiliary systems

Three systems guarantee water supply to the SPES-2 facility:

- the demineralized water system, including tanks, piping and valves to be used for feeding both the SPES-2 primary and secondary circuits;
- the cooling water loop supplying cold water directly to all the facility components which have to be cooled (pumps, compressors, etc.);
- the ultimate water sink consisting of a well, piping, valves and heat exchangers.

3.4.6 The air auxiliary systems

Two air supply systems are available for the SPES-2 facility:

- low pressure system, equipped with a screw compressor and drying unit, 7 bar pressure - 558 Nm^3/h flowrate - 55 kW power, delivering air to all the facility control valves;
- high pressure system, equipped with a volumetric compressor, 110 bar - 25 Nm^3/h flowrate - 15 kW power, generally used for accumulator pressurization.

3.5 SPES facility operation time

The SPES facility was designed, built and commissioned between 1985 and 1987 to simulate the Italian PWR-PUN, a Westinghouse 312 type reactor, with three loops and 1:427 volume scaling.
The tests were performed between 1998 and 1991 and they included:

- LOFW with EFW delayed (ISP-22);
- Single-Phase Natural Circulation;
- Two-Phase Natural Circulation;
- Station Blackout with PORV Bleed;
- LOFW with Bleed and Feed;
- SBLOCA Cold Leg 2” equivalent;
- Pump Trip transient.

Between 1992 and 1993, the SPES2 facility was designed, built and commissioned, upgrading SPES, to simulate the Westinghouse AP-600 reactor and support its design licensing by the US-NRC. It became a two loops facility with 1:395 volume scaling factor.
Tests were performed in 1994 and they included:

- N. 11 SBLOCA (1-inch and 2-inch equivalent);
- N. 3 SGTR (1 tube);
- N. 1 SLB.

In 1999 the test facility was refurbished and commissioned in the two loops configuration with the AP-600 typical Emergency Systems excluded. This new configuration was called SPES-99.
A test was performed in 1999 and it consisted in:

- IBLOCA (10-inch equivalent);

Considering the number of official tests, plant commissioning and shake-down, the total operation time of the power channel, present in all configurations, is less than 1000 hours.

Tab.3. 1 – SPES-2 primary system component materials

COMPONENT	MATERIAL	CODE
POWER CHANNEL		
active section vessel	SA 312 - TP 316	ASTM
loose flanges	SA 182 - F12	ASTM
downcomer	SA 312 - TP 316	ASTM
upper plenum	SA 312 - TP 316	ASTM
lower plenum	SA 312 - TP 316	ASTM
rod non-heated upper section	Nickel 200	
rod active section	SB 163 - Inconel 600	ASTM
rod cold section (130-2424 mm)	AISI 316	ASTM
rod cold section (0-130 mm)	Cu	
PRESSURIZER		
pressure vessel	X 2 Cr Ni Mo - N 1713	UNI 7500
surge line	SA 312 - TP 316	ASTM
vessel and sheets	A 105 + AISI 304 plated	ASTM
loose flanges	A 105	ASTM
PRIMARY COOLANT PUMPS		
pump body (bearing side)	A 182 - F 6 NM	UNI
pump body (seal side)	A 743 - CA 6 NM	UNI
impeller	A 743 - CA 6 NM	UNI
shaft	A 276 - 410	UNI
STEAM GENERATOR		
Primary inlet/outlet plena, tube sheet	SA 182 - F304	ASTM
tube bundle	SB 163 - Inconel 600	ASTM
lower vessel	SA 106 Gr B	ASTM
intermediate vessel (sep. side)	SA 204 Gr C	ASTM
upper vessel (steam dome)	SA 106 Gr B	ASTM
lap joint flanges	SA 105	ASTM
separator, dryers	AISI 304	
PIPING		
generally	SA 312 - TP 316	ASTM
hot leg	SA 312 - TP 316	ASTM
loose flanges	A 105	ASTM
ACCUMULATORS		
shell	SA 312 - TP 321/304	ASTM

Tab.3. 2 – SPES-2 power channel: main characteristics

Pressure	MPa	
nominal		15.5
design		20
Temperature	°C	
Core inlet		276.1
Core outlet		312.4
design		364.9
Flowrate	kg/s	
hot leg		12.6
core bypass		0
downcomer - u. head bypass		0.25
Overall height	m	10.45
Net volume	dm^3	218.75
Nozzle Diameter	mm	
Hot leg		66.7
Cold leg		54
DVI		11.8
tubular downcomer		92
downcomer - u. head bypass		24.3
Loose flanges number		
Lower plenum		1
Riser		1
Core		21
Upper plenum/head		-

Tab.3. 3 – SPES-2 power channel: main data

Description	Elevations (mm)		Lenght (mm)	D (mm)	Area (dm^2)	Flow area (dm^2)	Volume (dm^3)	Fluid volume (dm^3)	Body mass (kg)	Flange mass (kg)	Bolting mass (kg)
LOWER PLENUM	-7515	-6600	915	152	1.81	1.13	16.60	10.30	221	36	27
	-6600	-6168	432	216	3.66	2.97	15.50	12.53			
RISER	-6168	-5568	600	152	1.81	1.13	10.88	6.76	66	40	-
	-5568	-1458	4110	141 [1]	1.65	0.97	67.94	39.68	541	794	329
UPPER PLENUM	-1458	683	2141	158	1.96	1.96	41.27	41.27	158	-	39
UPPER HEAD	683	871	188	158	1.96	1.96	3.57	3.57	467	-	18
	871	2709	1838	187	2.75	2.75	50.26	50.26			
ANNULAR DOWNCOMER	-878	652	1530	202/168	0.99	0.99	14.87	14.87	304 [2]	-	-
TUBULAR DOWNCOMER	-800	6076	6270	87.3	0.60	0.60	37.53	37.53	346	84	23
	6020	6168	148	216/182	1.06	0.37	1.57	1.57			
DC - U. HEAD BYPASS	600	1425	825	24.3	0.05	0.05	0.38	0.41	11	21.52	6.12
CORE BYPASS	-5812	-1058	8473	42.9	0.145	0.145	12.37	12.37	93	20.54	3.8
Total								231.12	2207 [3]	996.06	446

[1] Octagonal section
[2] The metal mass of the separation cylinder is included in the upper plenum.
[3] The rod bundle mass, upper plate and grids included, is 239 kg.

Tab.3. 4 – SPES-2 rod bundle: main data

Number of rods	Units	
total		97
standard rods		95
hot rods		2
Design pressure/temperature	MPa/°C	
standard rods		20/450
		16/650
hot rods		20/500
		16/700
Rod external/inner diameter	mm	
standard rods		9.5/7.9
hot rods		9.5/7.5
Lattice		square
Pitch	mm	12.6
Minimum rod-wall gap	mm	2.8
Length	mm	
Total		6467
inside vessel		6220
heated		3663
Power	kW	
nominal		4894
maximum		9000
Maximum current	kA	70

Tab.3. 5 – SPES-2 pressurizer: main characteristics

	Units	
Fluid		saturated water and steam
Water volume/Overall volume	-	0.6
Nominal water level	m	3.78
Pressure		
design	MPa	20
nominal	MPa	15.5
safety valve set	MPa	20
Temperature		
design	°C	365
nominal	°C	354
Internal heaters		6
number		3 (1 spare)
maximum power each	kW	16
Level set-point for switch-off	m	2
External heaters		
number		6
maximum power each	kW	3.8
efficiency	%	77
Volume	dm^3	95.4
Height	m	6.796
Diameter		
vessel	mm	134
Weight	kg	800

Tab.3. 6 – SPES-2 primary coolant pumps: main characteristics

	Units	
Design pressure	MPa	20
Design temperature	°C	365
Nominal conditions		
suction pressure	MPa	15.3
temperature	°C	276
capacity	kg/s	12.6
power	kW	20
global efficiency	%	52
NPSH	m	2.6
Speed control range	rad/s	+/- 628
Maximum power	kW	50
Fluid volume	dm^3	4.3
Global inertia	$kg*m^2$	3.5
Weight		
body	kg	620
motor	kg	280
basement	kg	1150
Sealing system		
fluid		water
flowrate	kg/s	0.083
injection pressure	MPa	16.3
DP across the seal		
inner	MPa	0.5
intermediate	MPa	14.3
outer	MPa	1.5
Leakage	kg/s	0
Seal pv		
inner	MPa m/s	5
intermediate	MPa m/s	140
outer	MPa m/s	15

Tab.3. 7 – SPES-2 accumultors: main characteristics

	Units	
Number		2
Fluid		air or nitrogen/water
Design pressure	MPa	11.6
Design temperature	°C	350
Nominal pressure	MPa	4.3
Nominal water volume	%	87
Nominal water level	MPa	2.6
Inside diameter	mm	248
Height	mm	3043
Volume	dm^3	143
Mass	kg	330

Tab.3. 8 – SPES-2 steam generator: main characteristics

	Units	
Design pressure	MPa	20
Design temperature	°C	365
Nominal conditions		
Pressure	MPa	4.9
Feedwater flowrate	kg/s	1.35
Feedwater temperature	°C	226
level	MPa	12.8
relief valve pressure set-point	MPa	7
Safety valve pressure set-point	MPa	10
PORV orifice Diameter	mm	5.2
U-tube number		13
U-tube average length	m	16.7
Heat exchanger surface	m^2	11.8
Overall height	m	15.59
Secondary fluid volume	dm^3	388
Nozzle ID		
feedwater line	mm	38.1
steam line	mm	73.7
inlet/outlet plena	mm	66.6

Tab.3. 9 – SPES-2 steam generator U-tubes: main characteristics

	Units	
Design pressure	MPa	20
Design temperature	°C	365
Number		13
Array		square
Pitch	mm	24.89
Outer diameter	mm	17.46
Inner diameter	mm	15.44
Average length	m	16.742
Average active length	m	16.564
Straight average length	m	8.21
Max. elevation of the longest tube	m	8.323
Max. elevation of the shortest tube	m	8.153
Elevation of grids from tube sheet top	m	1.115, 2.23, 3.345, 4.460, 5.575, 6.69, 7.805
Inlet+Outlet plenum volume	dm^3	7.43
Heat transfer area referred to ID	m^2	10.43
Heat transfer area referred to OD	m^2	11.81
Flow area	mm^2	2.428
Secondary flow area	mm^2	12127

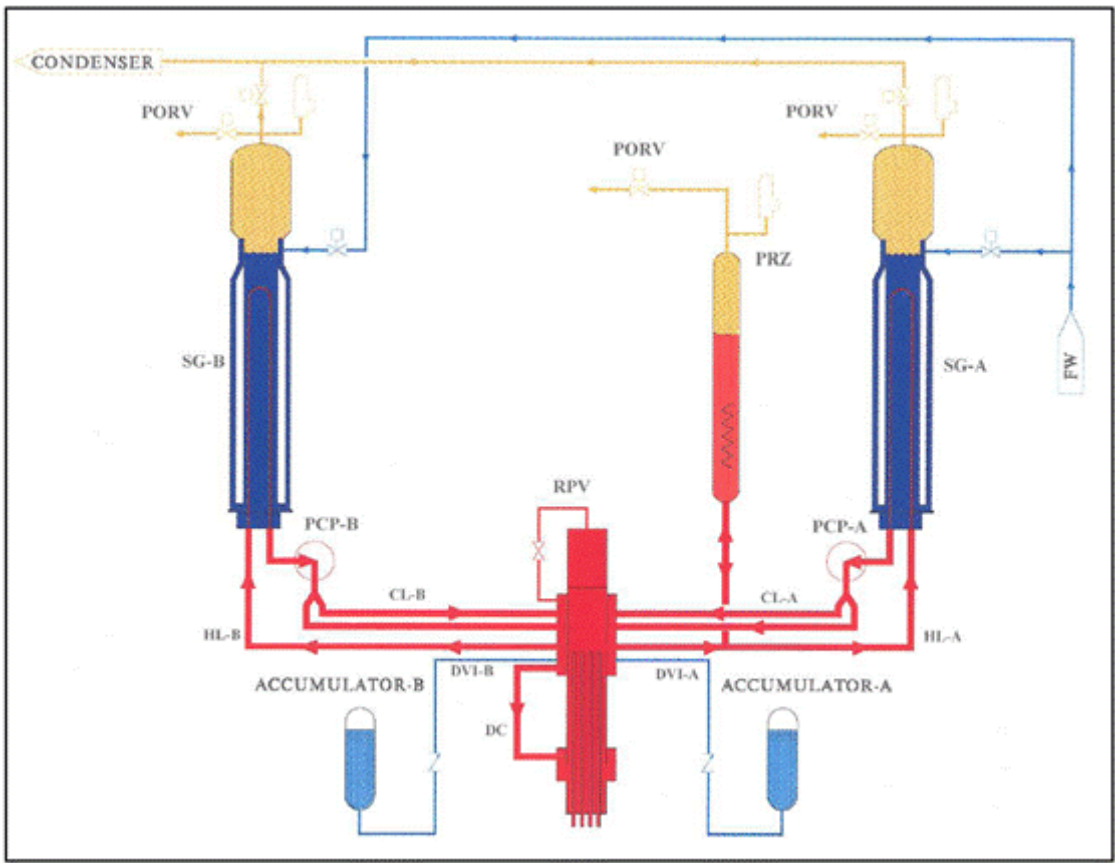

Fig.3. 1 – SPES-99 facility scheme

Fig.3. 2 – SPES-99 flow diagram

SIET drawing N. 025.05.01 SPES-99 P & I Diagram

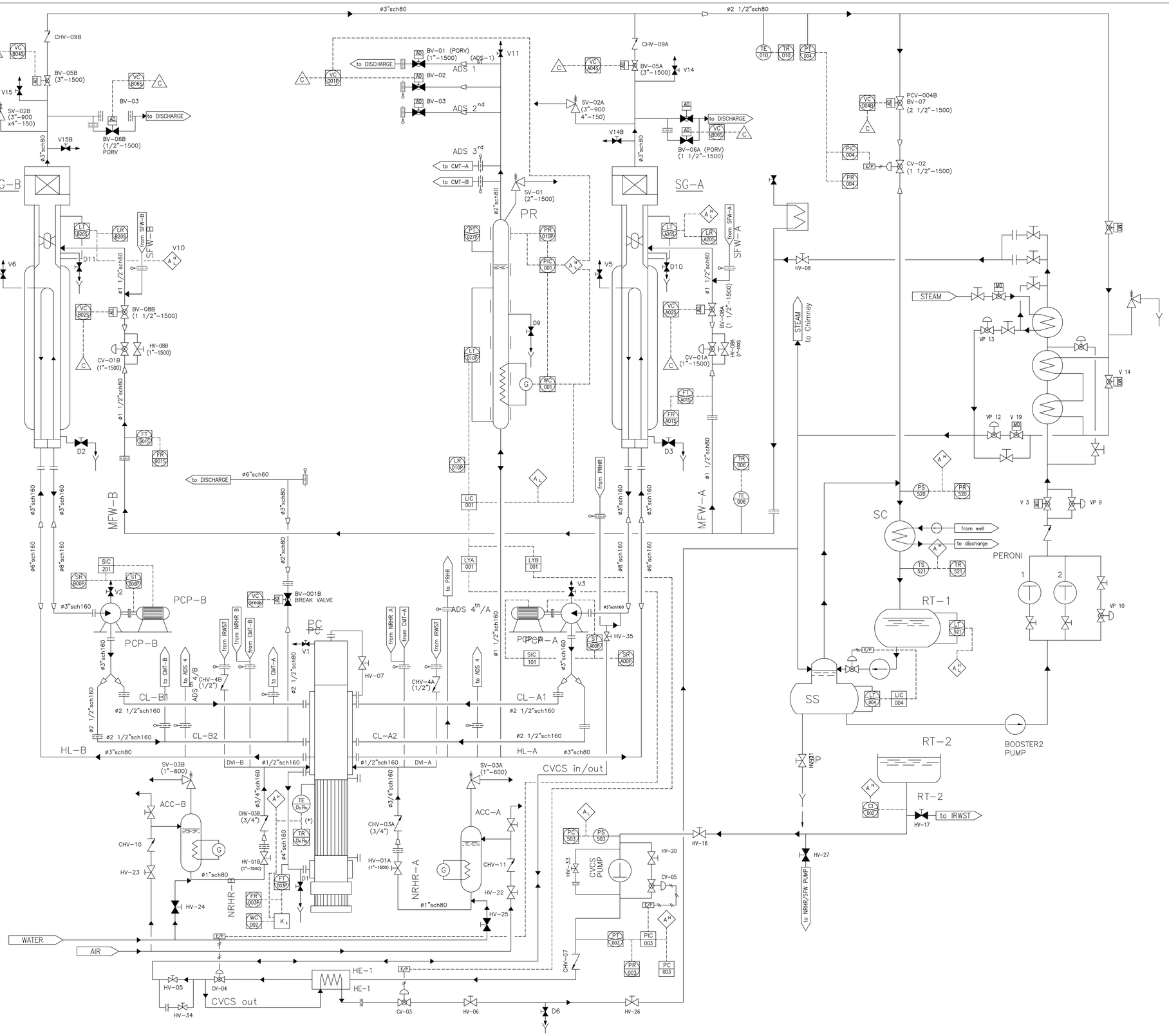

INSTRUMENTATION LEGEND TABLE

FUNCTION / SUCCEEDING LETTERS / FIRST LETTERS / MEASURED QUANTITY		CONTROLLER	PRIMARY ELEMENT	INDICATOR	INDICATOR /CONTROLLER	RECORDER	TRANSMITTER	SPLIT RANGE /CONVERTER		SWITCH
		C	E	I	IC	R	T	YA	YB	S
DIFFERENTIAL PRESSURE	DP				DPIC	DPR	DPT			
FLOW	F	FC			FIC	FR	FT			
LEVEL	L	LC			LIC	LR	LT	LYA	LYB	
PRESSURE	P	PC		PI	PIC	PR	PT			PS
SPEED OR ROTATION FREQUENCY	S				SIC	SR	ST			
TEMPERATURE	T	TC	TE			TR				TS
ELECTRICAL POTENTIAL	V	VC								
ELECTRICAL POWER	W	WC								
CONDUCTIVITY	C			CI						

(*) – n = Level number (n=11 ÷ 20)
m = Rod number

INDICE	DATA	MODIFICHE	DISEGNO	CONTROL.	APPROV.
8	18/07/12	Rev. 8	Ferri	Achilli	Cattedori
7	22/11/99	Rev. 7	Martini	Achilli	Cattedori
6	26/07/99	Rev. 6			
5	05/07/99	Rev. 5	AM		
4	27/04/99	Rev. 4	AM		
3	05/04/99	MODIFIED "AS BUILT"	ESP		
2	25/02/95	MODIFIED "AS BUILT"	ESP		
1	24/11/93				
0	30/11/92				

SIET PIACENZA – Italy

DESCRIZIONE: SPES-99 P & I Diagram

SCALA	DISEGNO	FOGLIO	DI	DERIVATO DA
/	N° 25.05.01			

25-05-01 – FORMATO A0

Fig.3. 3 – SPES-99 instrumentation diagram

SIET drawing N. 025.05.04 SPES-99 instrumentation diagram

to CONDENSER
to DISCARGE
SG – A
SG – B
FW–A
FW–B
PR
SL
MFW
from HE–2
to SG–B
from HE–2
PCP–A
PCP–B
PS–A
PS–A
CVCS
to separator
to DISCHARGE
BRK line
CL–A1
CL–A2
CL–B1
CL–B2
HL–A
HL–B
HL–B
DVI–A
DVI–B
ACC–A
ACC–B
AIR
WATER
AIR
WATER
I01P to I06P
V–01P
SECT. A–A
SECT. B–B
SECT. C–C
SECT. D–D
DVI A
DVI B
HL A
HL B
DC

2	22/11/99	Rev. 2	Mortini	Achilli	Cattadori
1	06/07/99	Rev. 1			
0	22/04/99	Emissione			
INDICE	DATA	MODIFICHE	DISEGNO	CONTROL.	APPROV.

SIET
PIACENZA – Italy

DESCRIZIONE
SPES 99 – System LOOP A and LOOP B instrumentation

SCALA	DISEGNO	FOGLIO	DI	DERIVATO DA
/	N° 25.05.04			N 25.05. 04–2

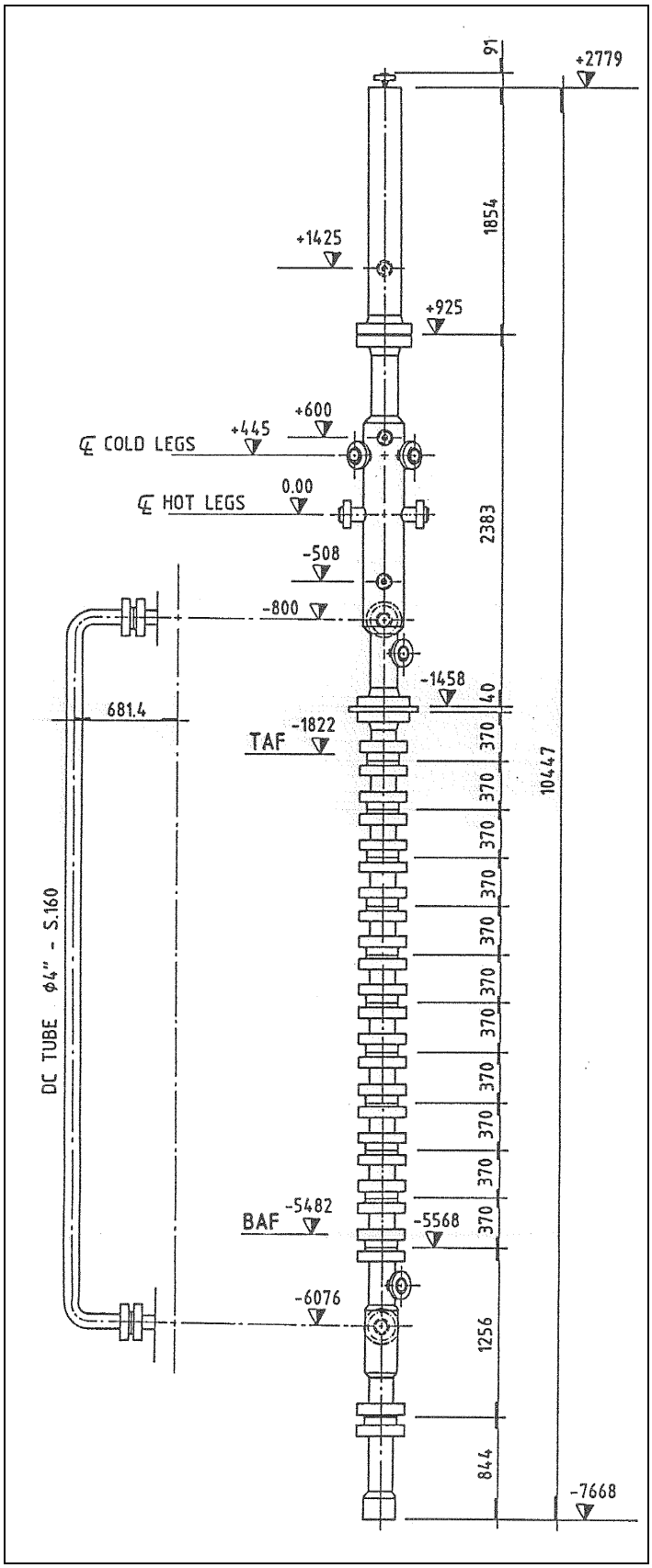

Fig.3. 4 – SPES-2 power channel: general view

Fig.3. 5 – SPES-2 power channel: Lower Plenum

Drawing N. 025-01-03

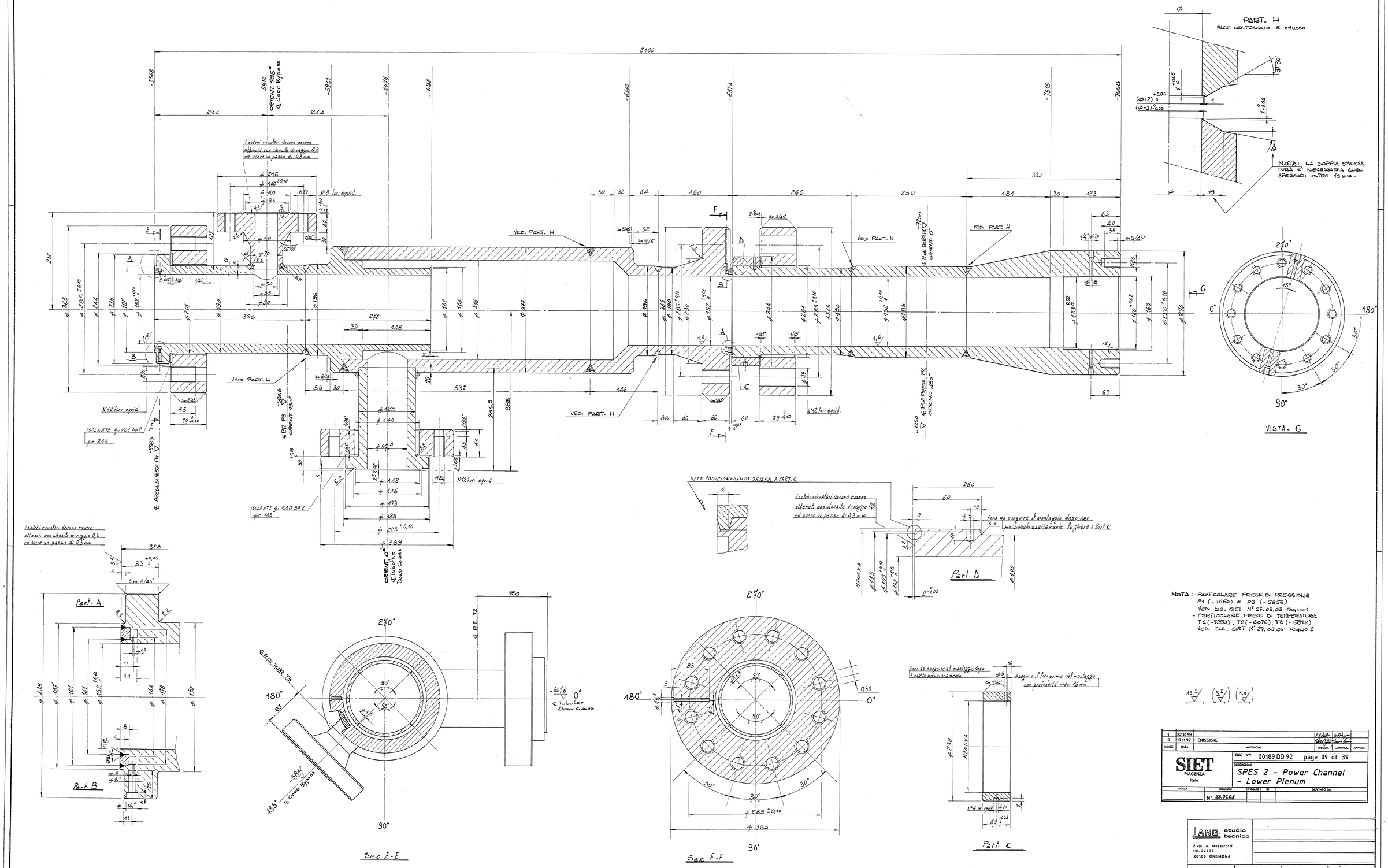

NOTA :- PARTICOLARE PRESE DI PRESSIONE
P1 (-7250) E P3 (-5856)
VEDI DIS. SIET N° 27.03.05 FOGLIO 1
- PARTICOLARE PRESE DI TEMPERATURA
T1 (-7250), T2 (-6076), T3 (-5812)
VEDI DIS. SIET N° 27.03.05 FOGLIO 2

INDICE	DATA	MODIFICHE	DISEGN.	CONTROL.	APPROV.
1	22.10.93				
0	19.11.92	EMISSIONE			

SIET PIACENZA Italy

DOC. N°: 00189 DD 92 page 09 of 39

DESCRIZIONE: SPES 2 - Power Channel - Lower Plenum

SCALA | DISEGNO N° 25.01.03 | FOGLIO | DI | DERIVATO DA

LANG studio tecnico
2 via A. Massarotti
tel. 22326
26100 CREMONA

DATA 18-11-92 | DISEGNATO | IL CALCOLATORE | DISEGNO N° 856
SCALA 1:2,5 - 1:1 | VISTO

25.01.03

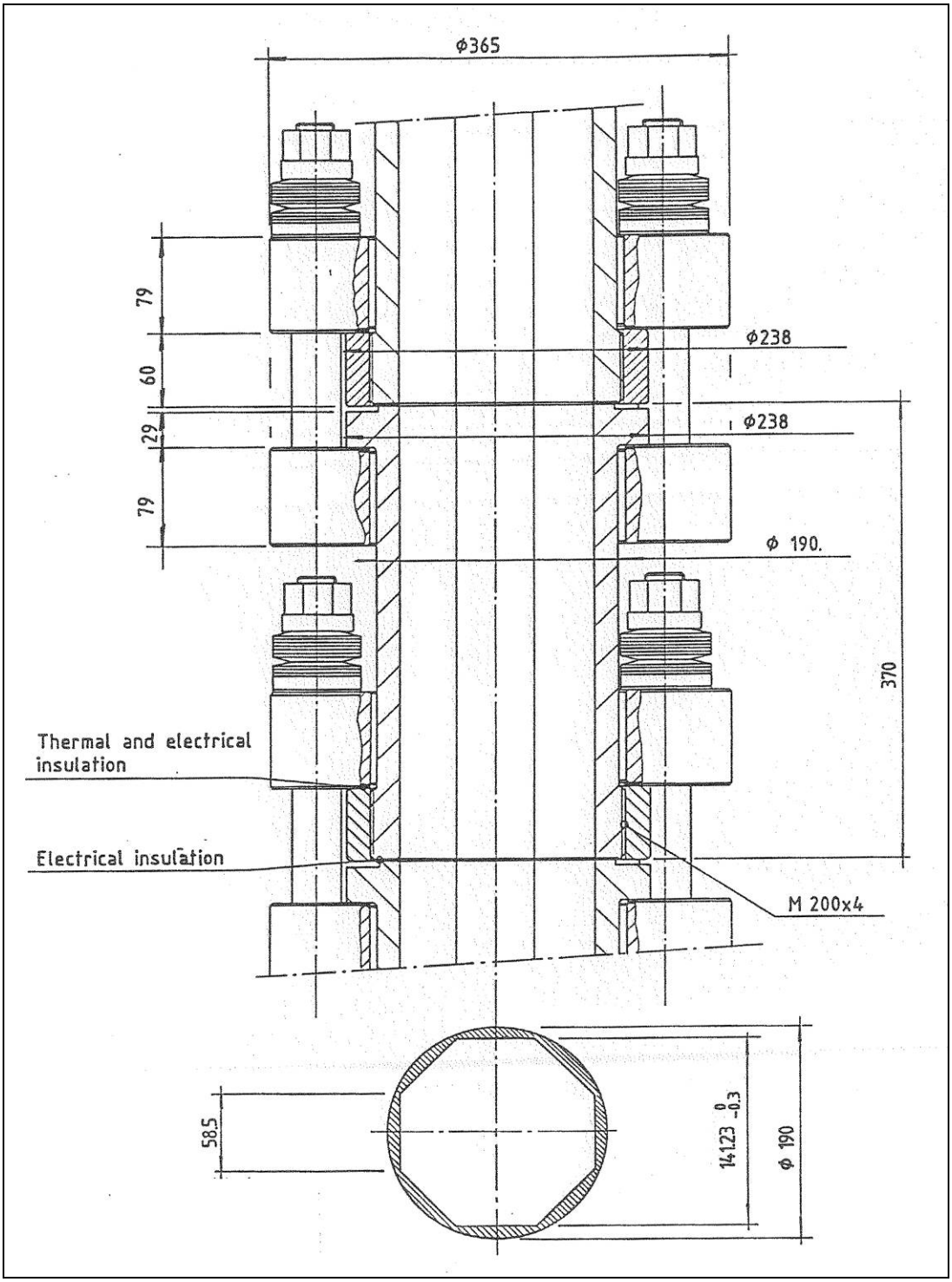

Fig.3. 6 – SPES-2 power channel: Riser section active zone

Fig.3. 7 – SPES-2 power channel: Upper Plenum

Drawing N. 025-01-02

25.01.02 / 1

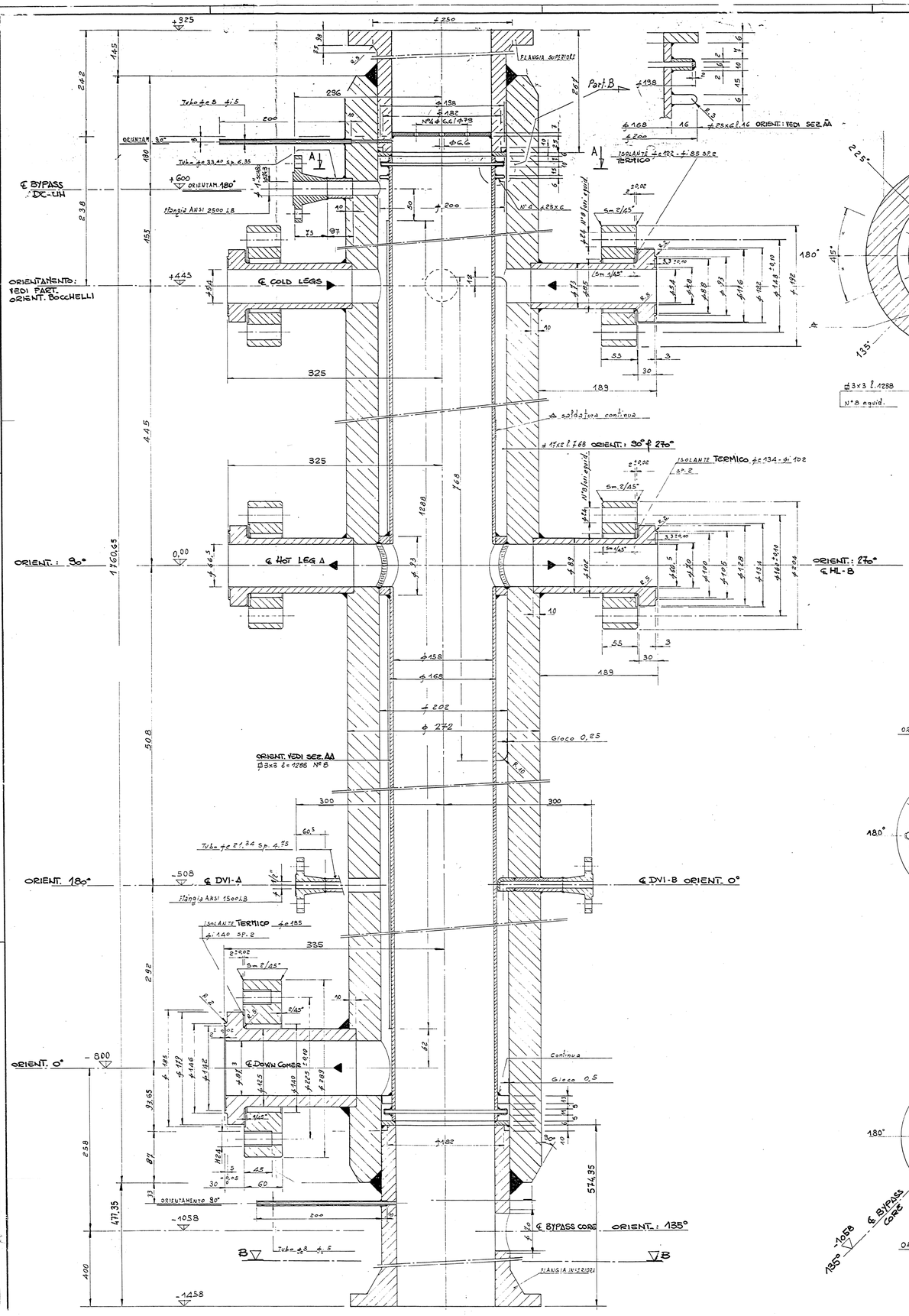

1	3.11.93	AS BUILT	
0	29.10.93	ISSUED	
D	22.10.93		
C	3.12.92		
B	20.10.92		
INDICE	DATA	MODIFICHE	DISEGN. CONTROL. APPROV.

SIET PIACENZA Italy

DESCRIZIONE: SPES 2 Annular Down Comer

SCALA | DISEGNO N° 25.01.02 | FOGLIO | DI | DERIVATO DA

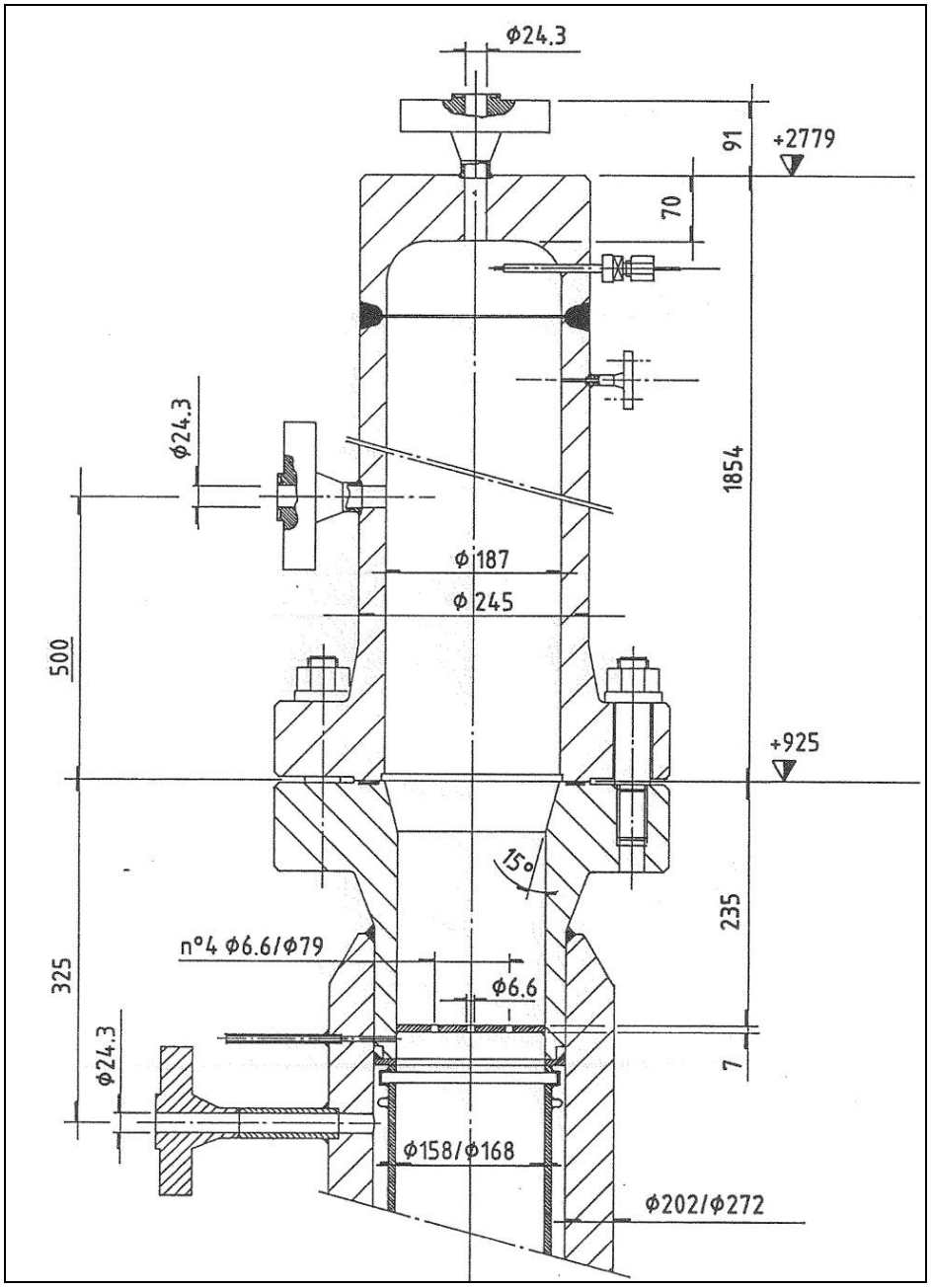

Fig.3. 8 – SPES-2 power channel: Upper Head

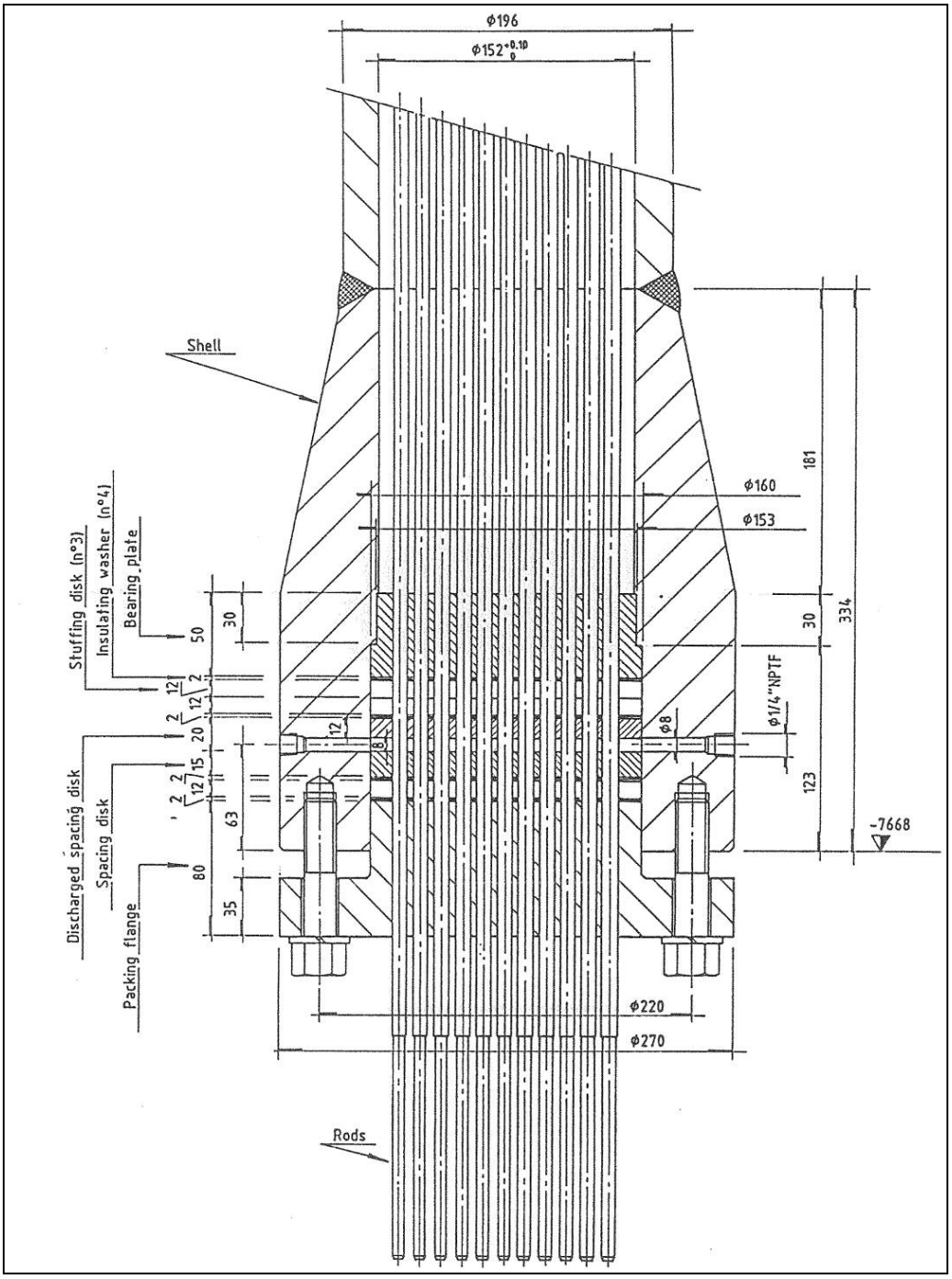

Fig.3. 9 – SPES-2 power channel: lower plenum sealing system

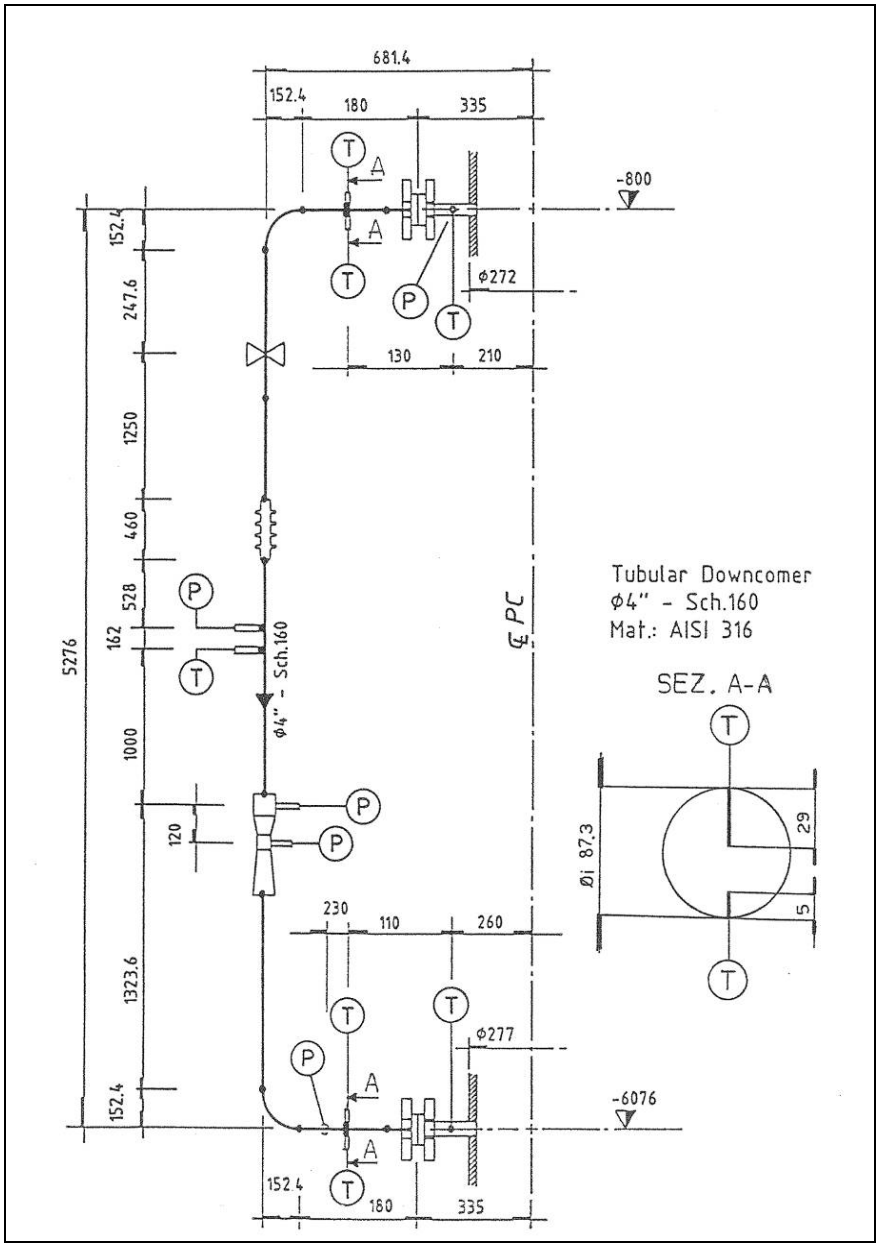

Fig.3. 10 – SPES-2 power channel: tubular downcomer

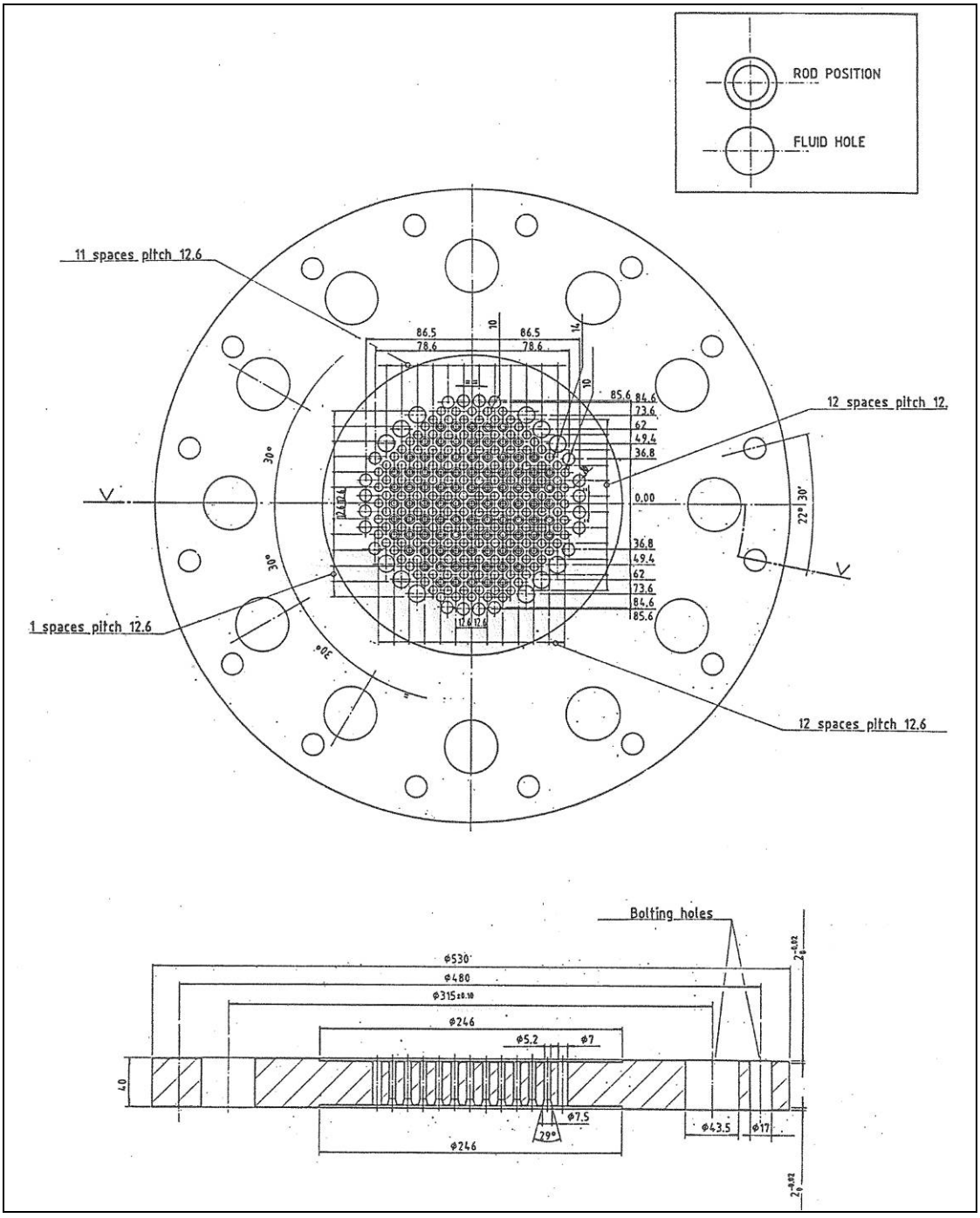

Fig.3. 11 – SPES-2 power channel: upper power plate

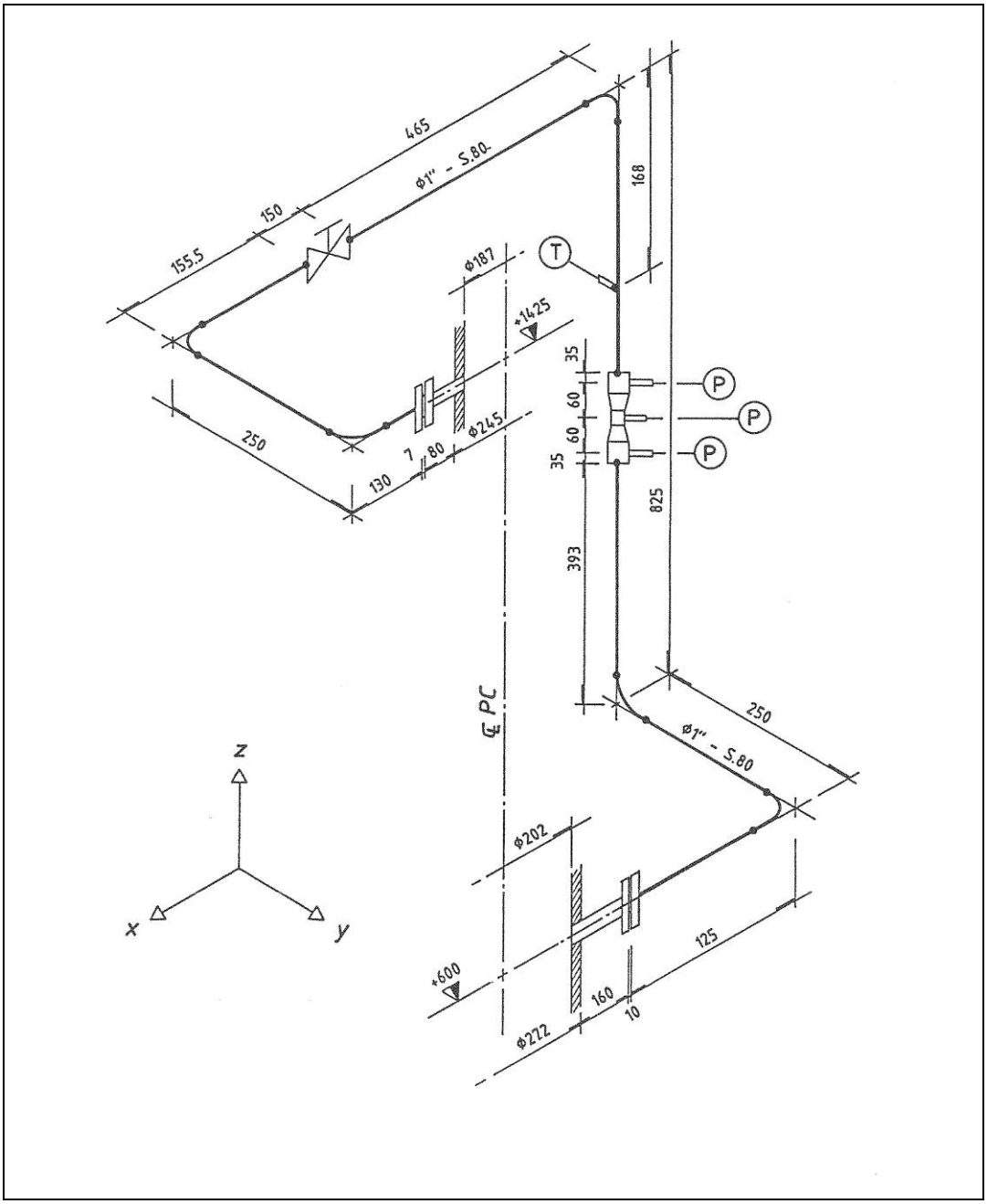

Fig.3. 12 – SPES-2 power channel: downcomer – upper head bypass

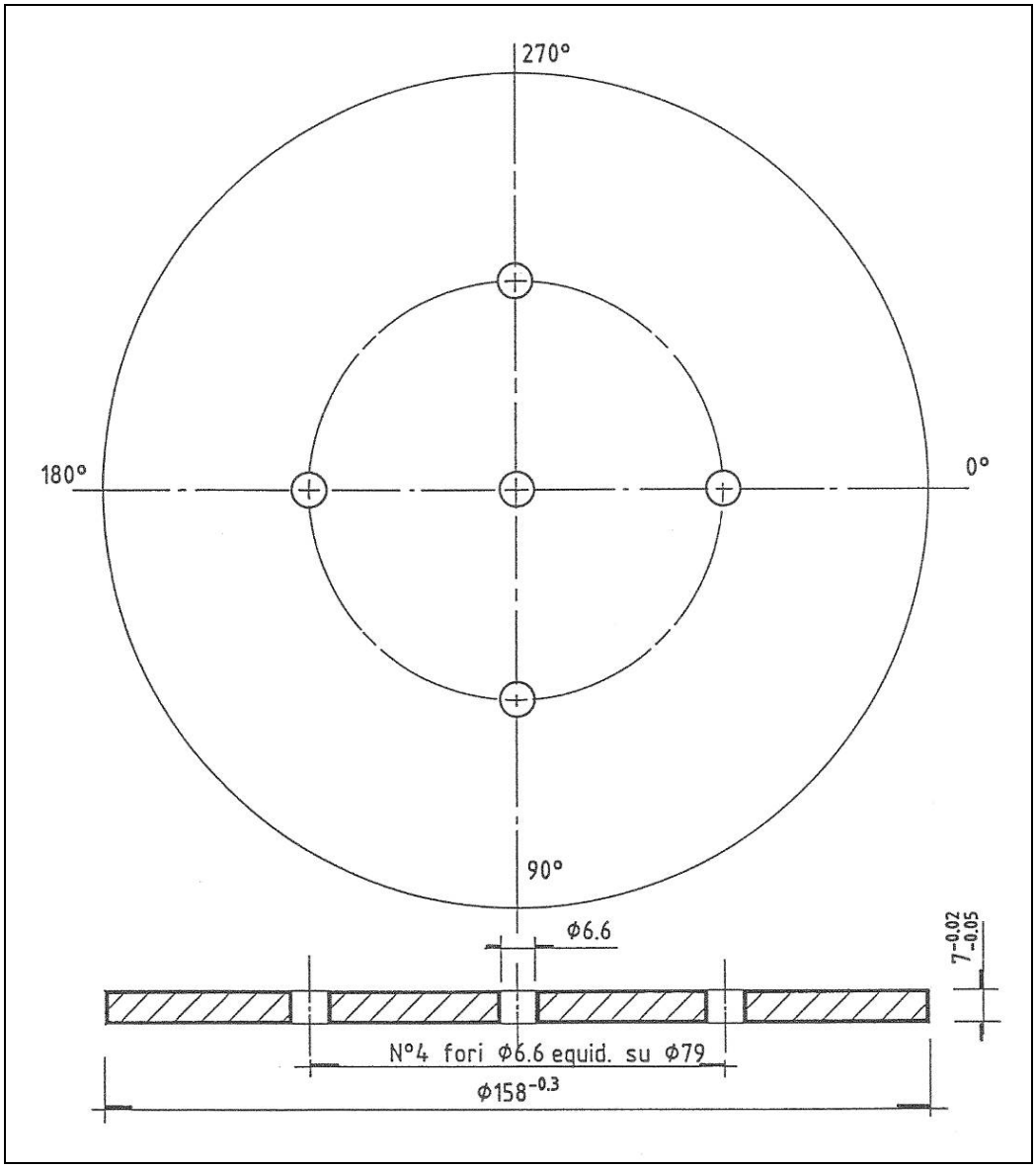

Fig.3. 13 – SPES-2 power channel: separation plate

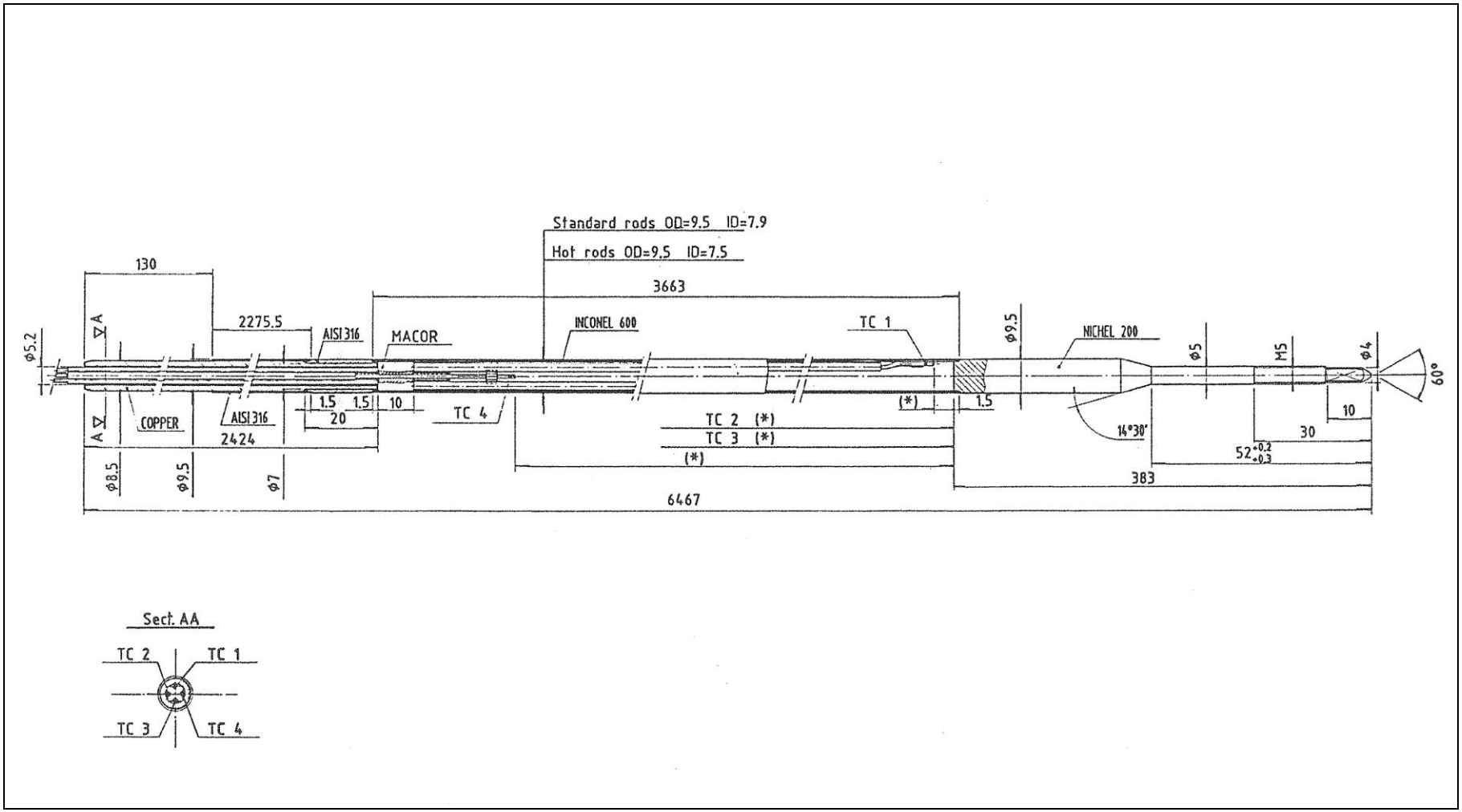

Fig.3. 14 – SPES-2 power channel: heater rod

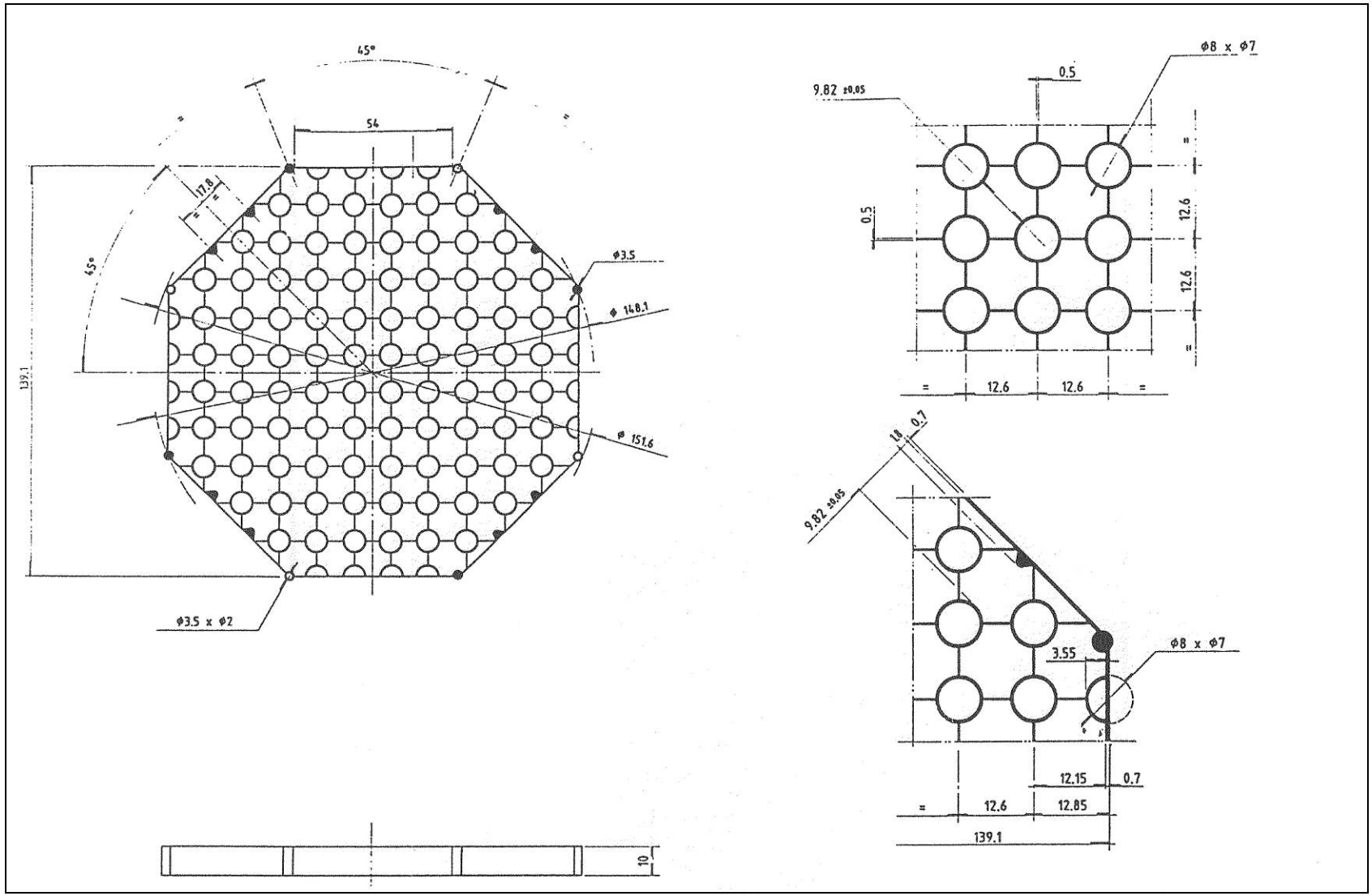

Fig.3. 15 – SPES-2 power channel: rod bundle spacer grid

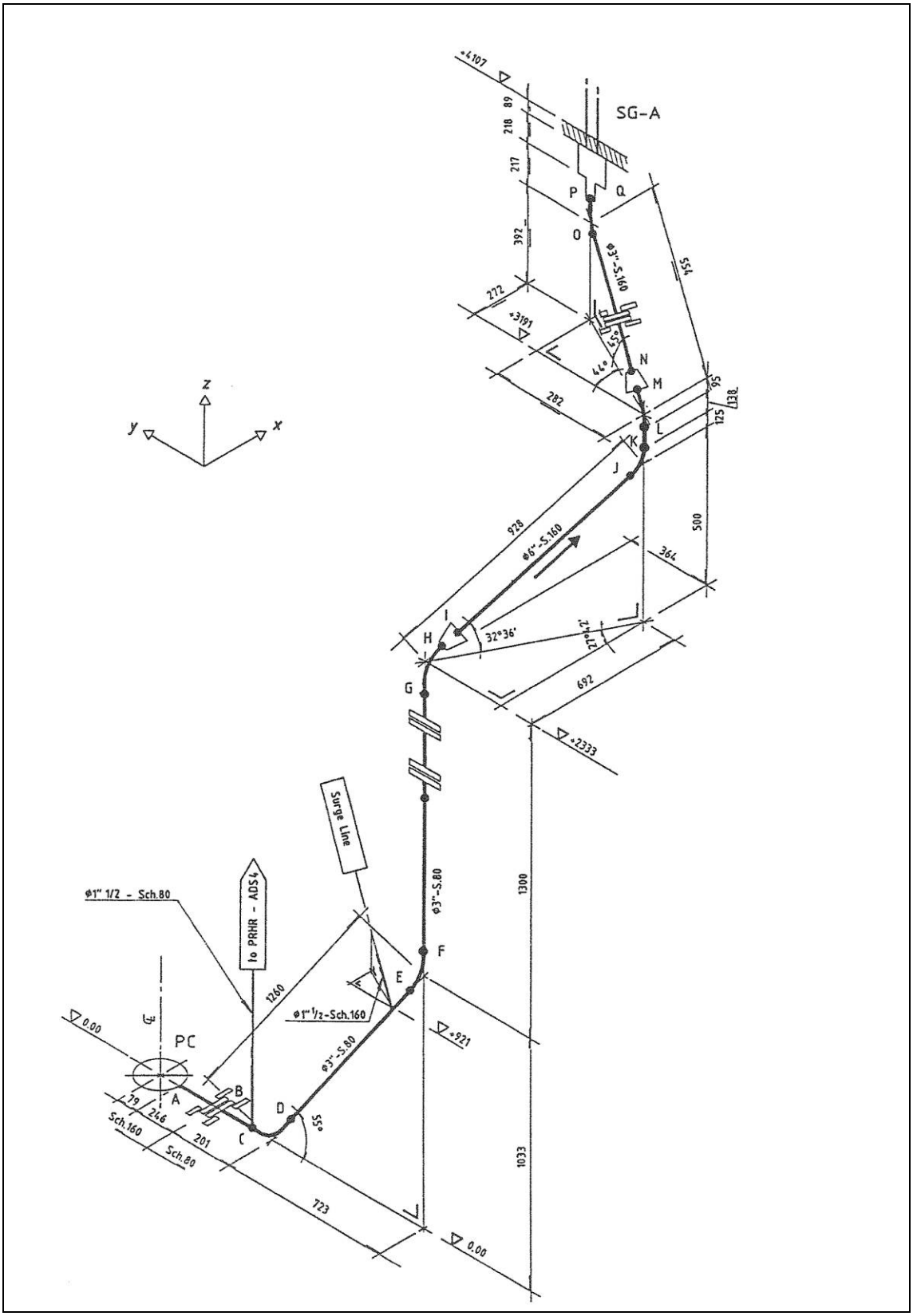

Fig.3. 16 – SPES-2 Hot Leg-A layout

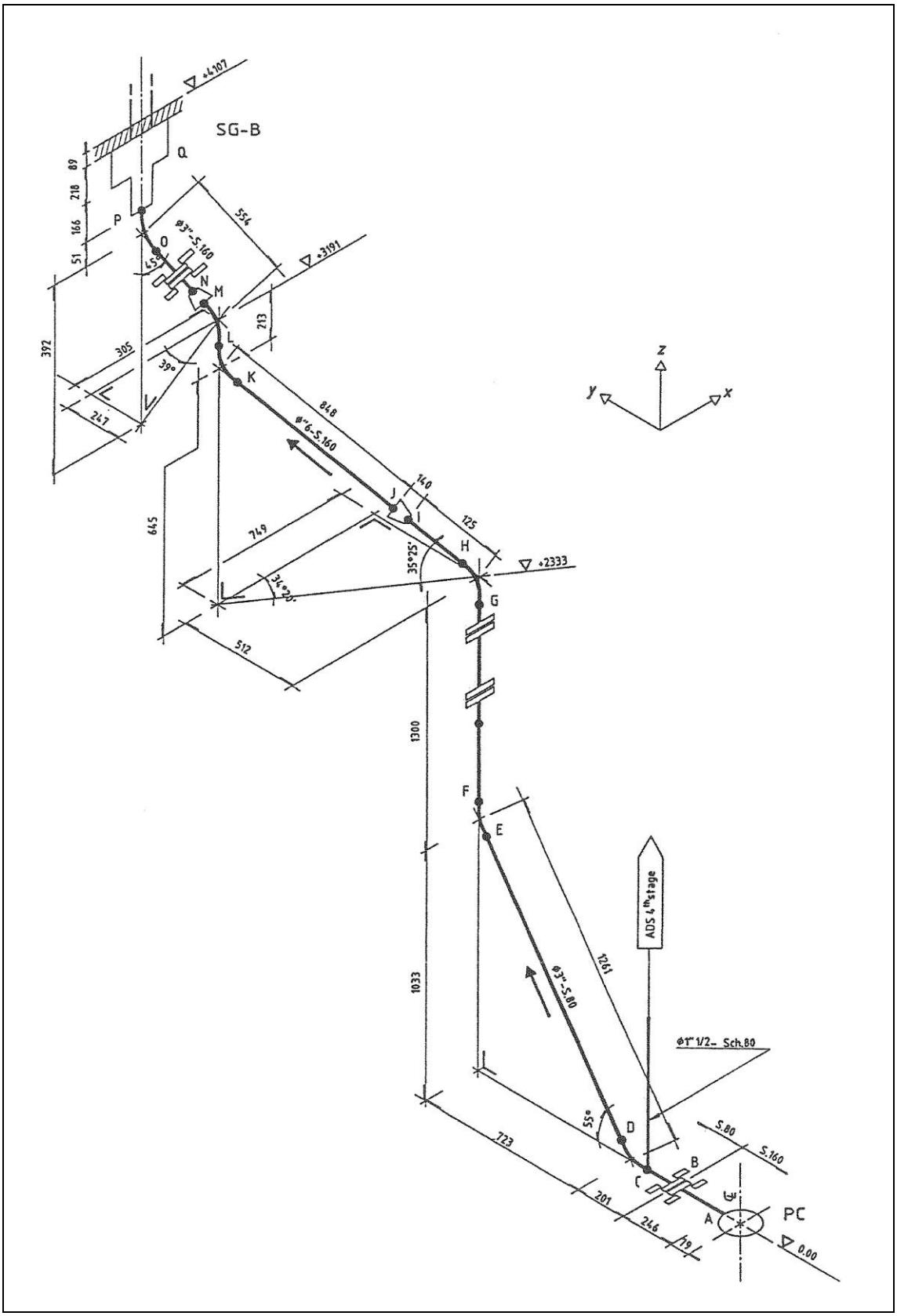

Fig.3. 17 – SPES-2 Hot Leg-B layout

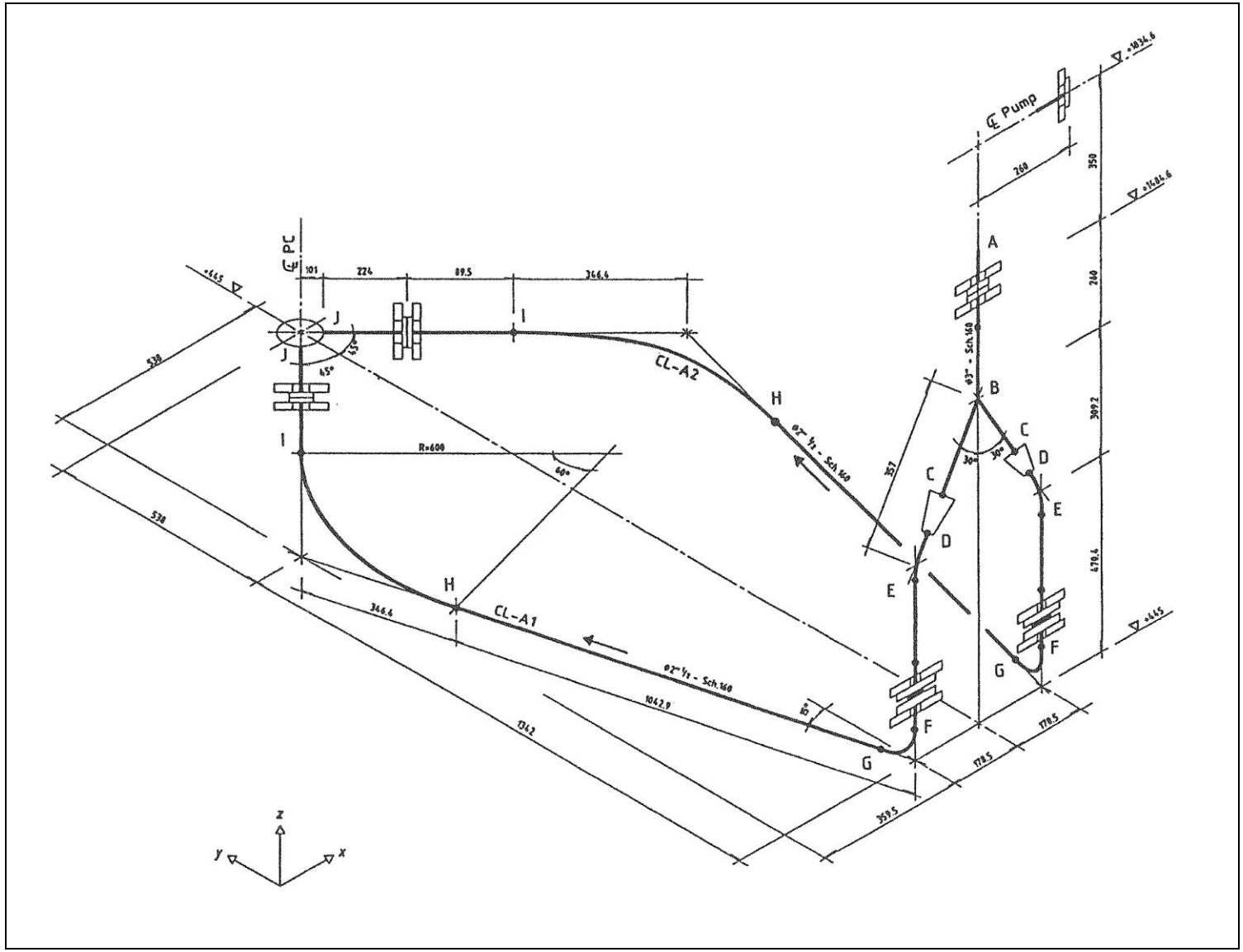

Fig.3. 18 – SPES-2 Cold Leg-A layout

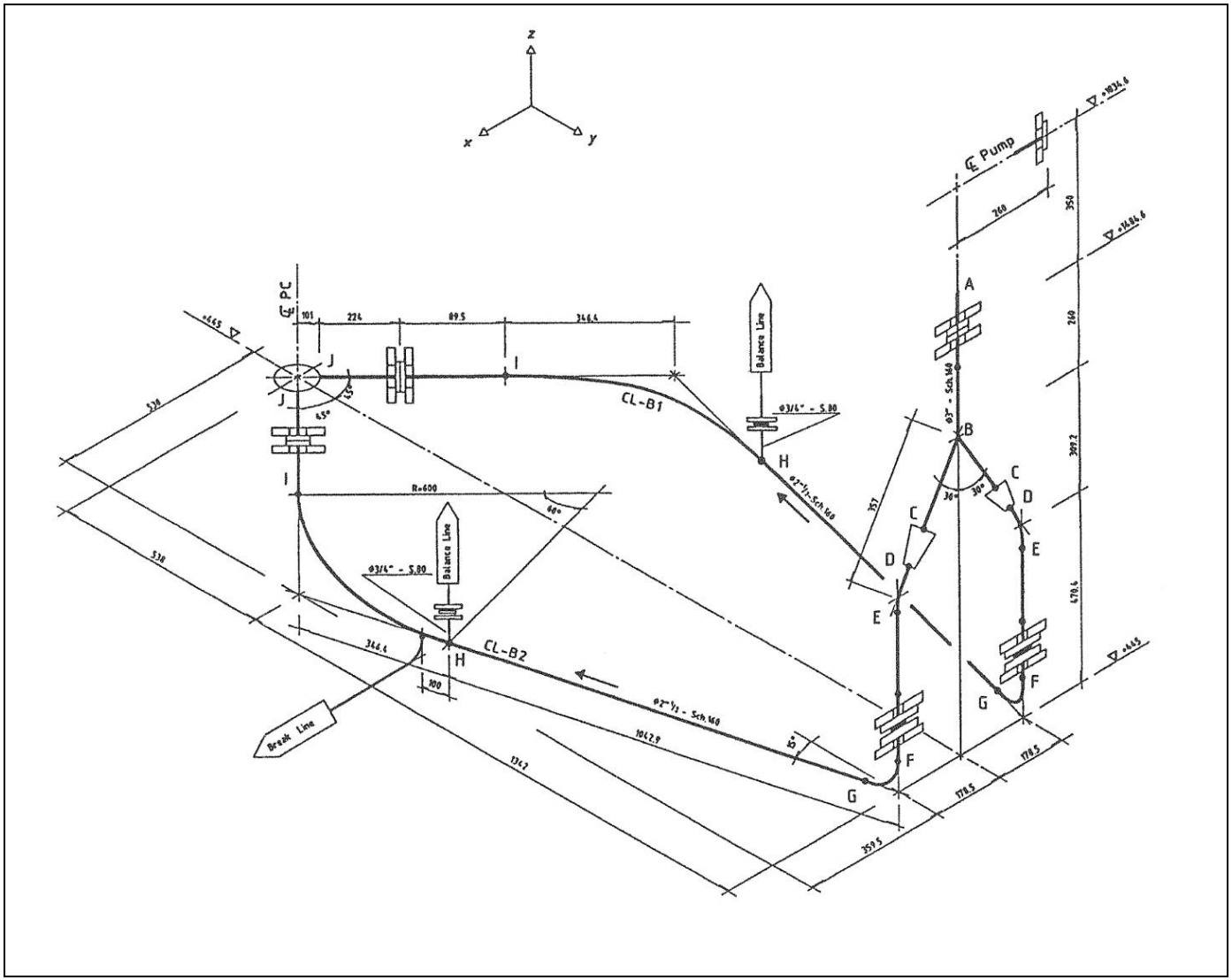

Fig.3. 19 – SPES-2 Cold Leg-B layout

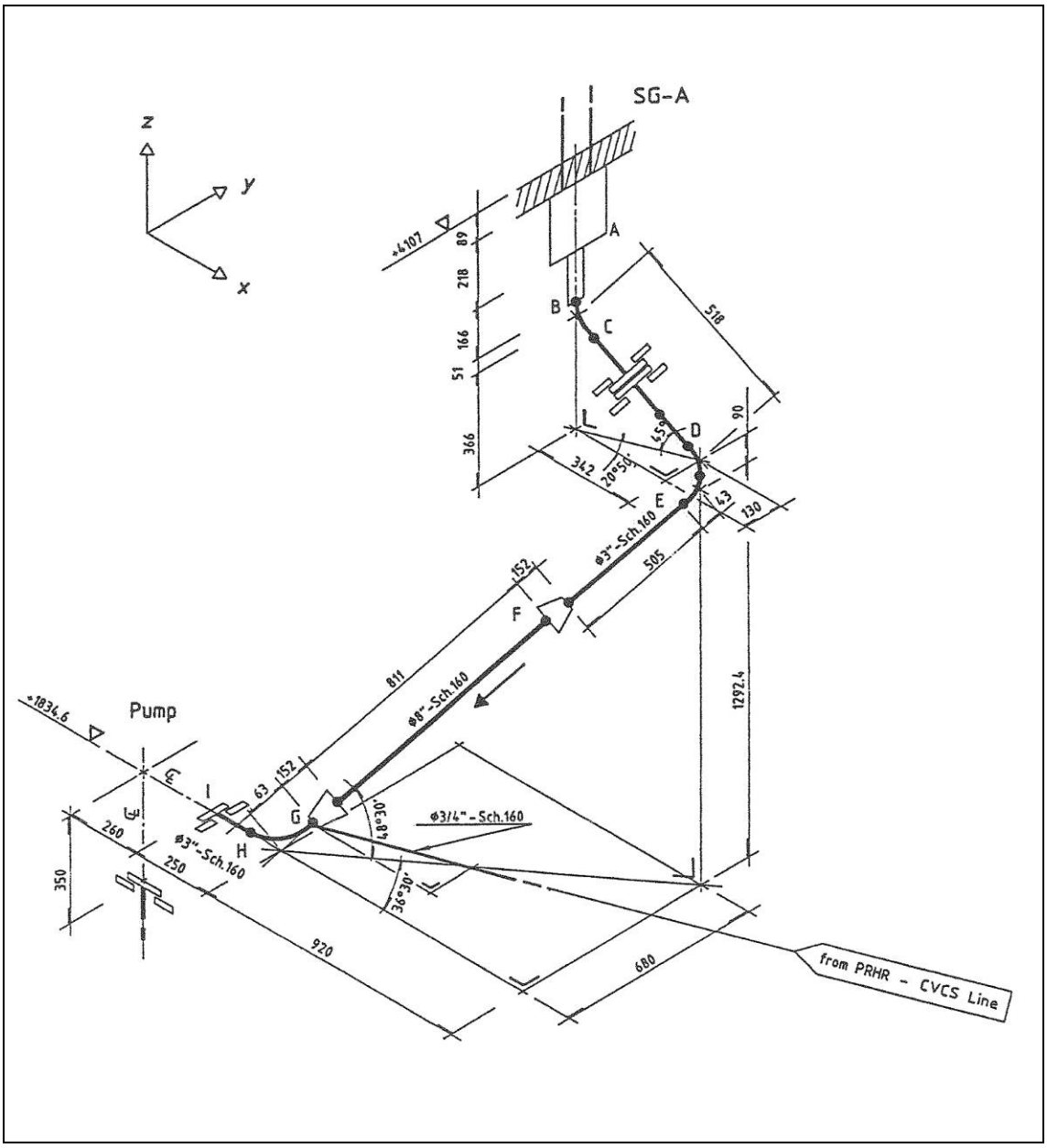

Fig.3. 20 – SPES-2 Pump-A suction pipe

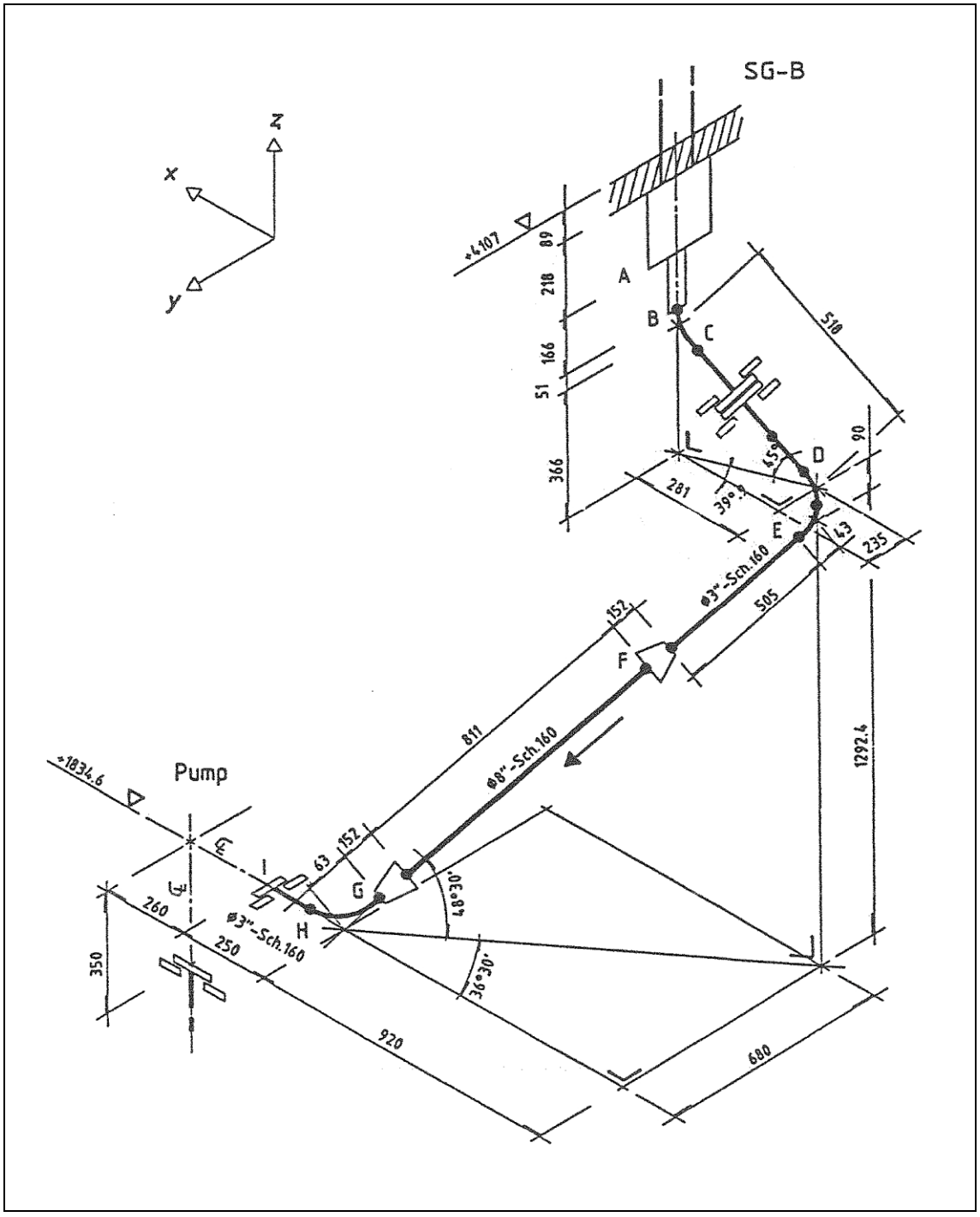

Fig.3. 21 – SPES-2 Pump-B suction pipe

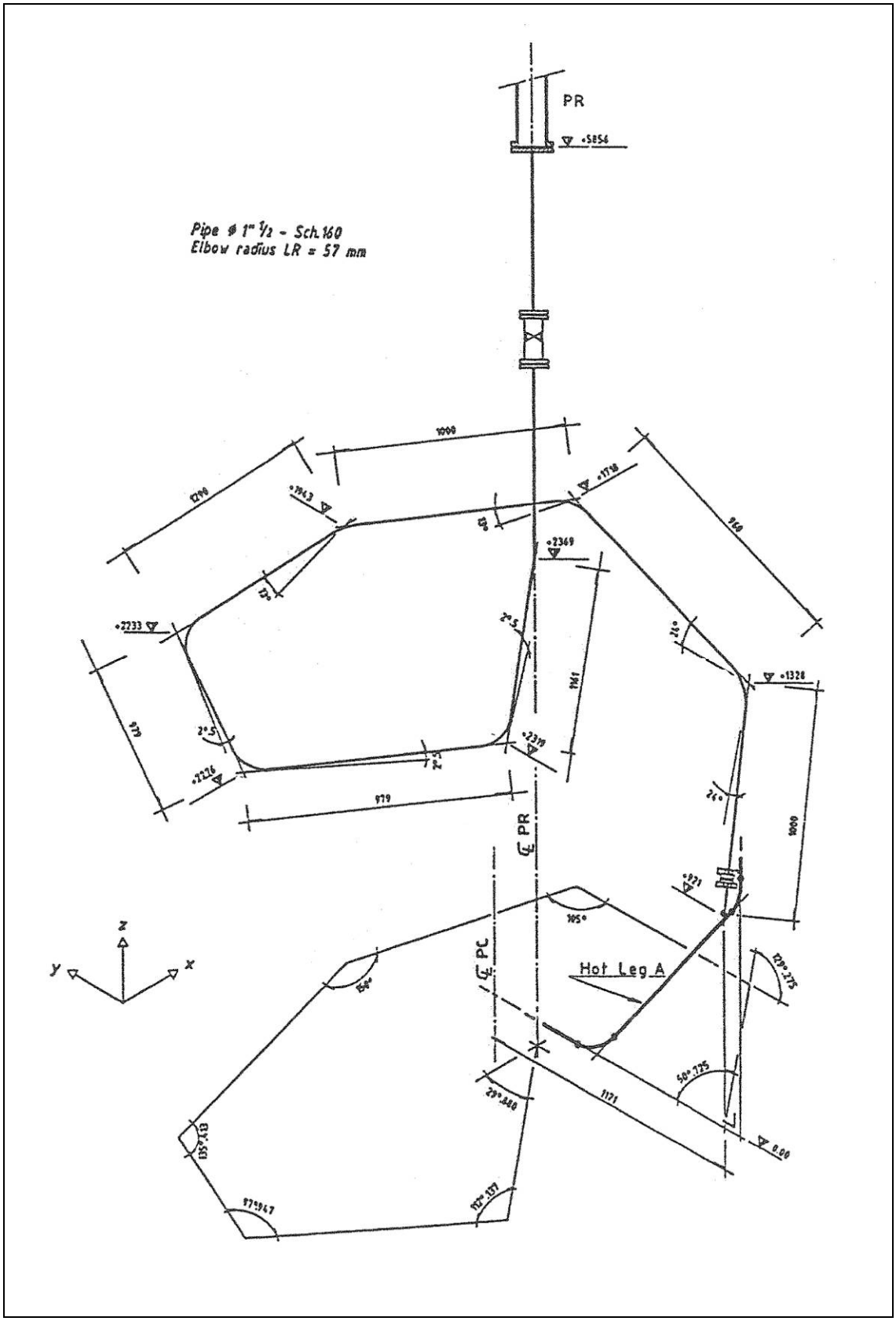

Fig.3. 22 – SPES-2 Pressurizer surge line layout

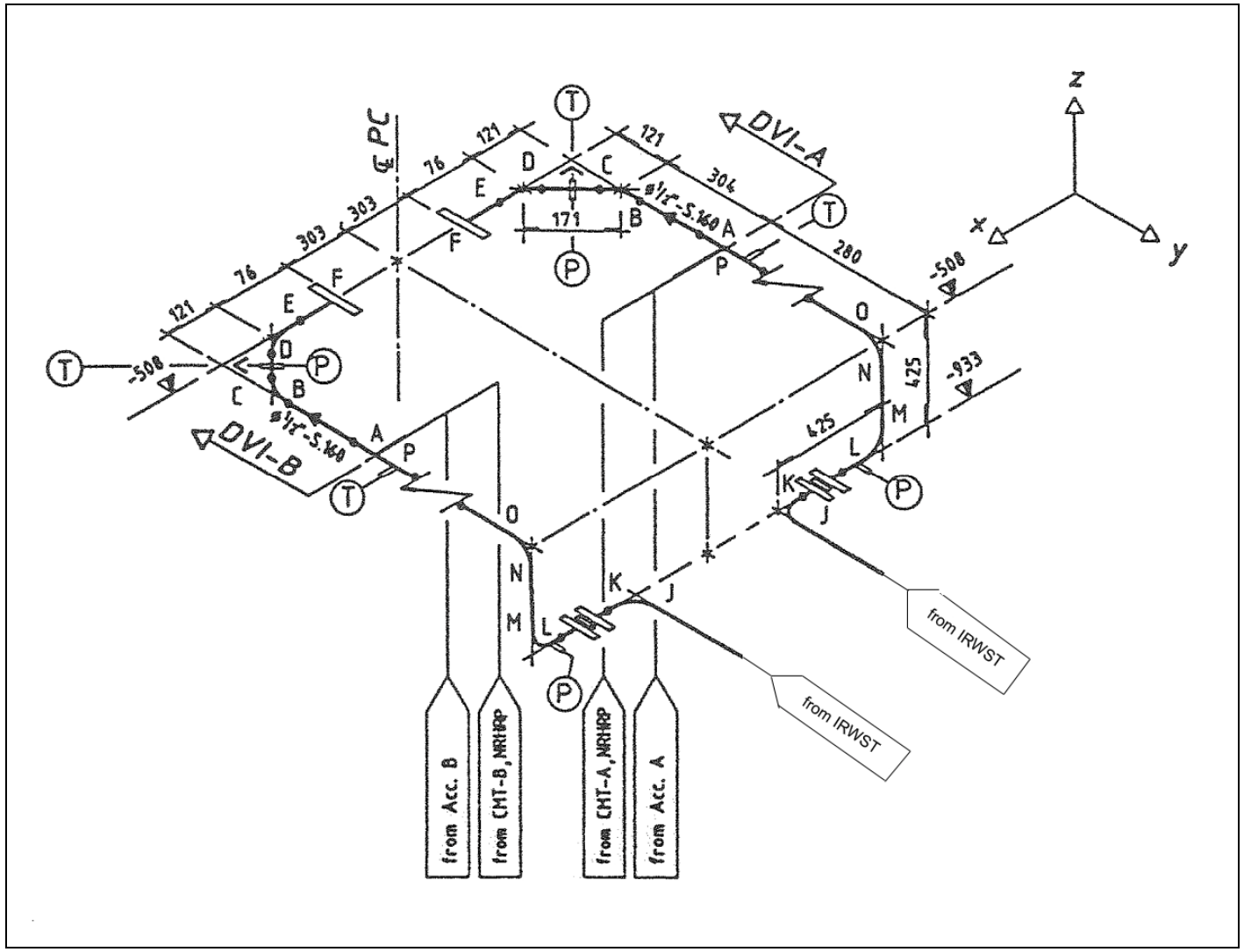

Fig.3. 23 – SPES-2 DVI-A and DVI-B line layout

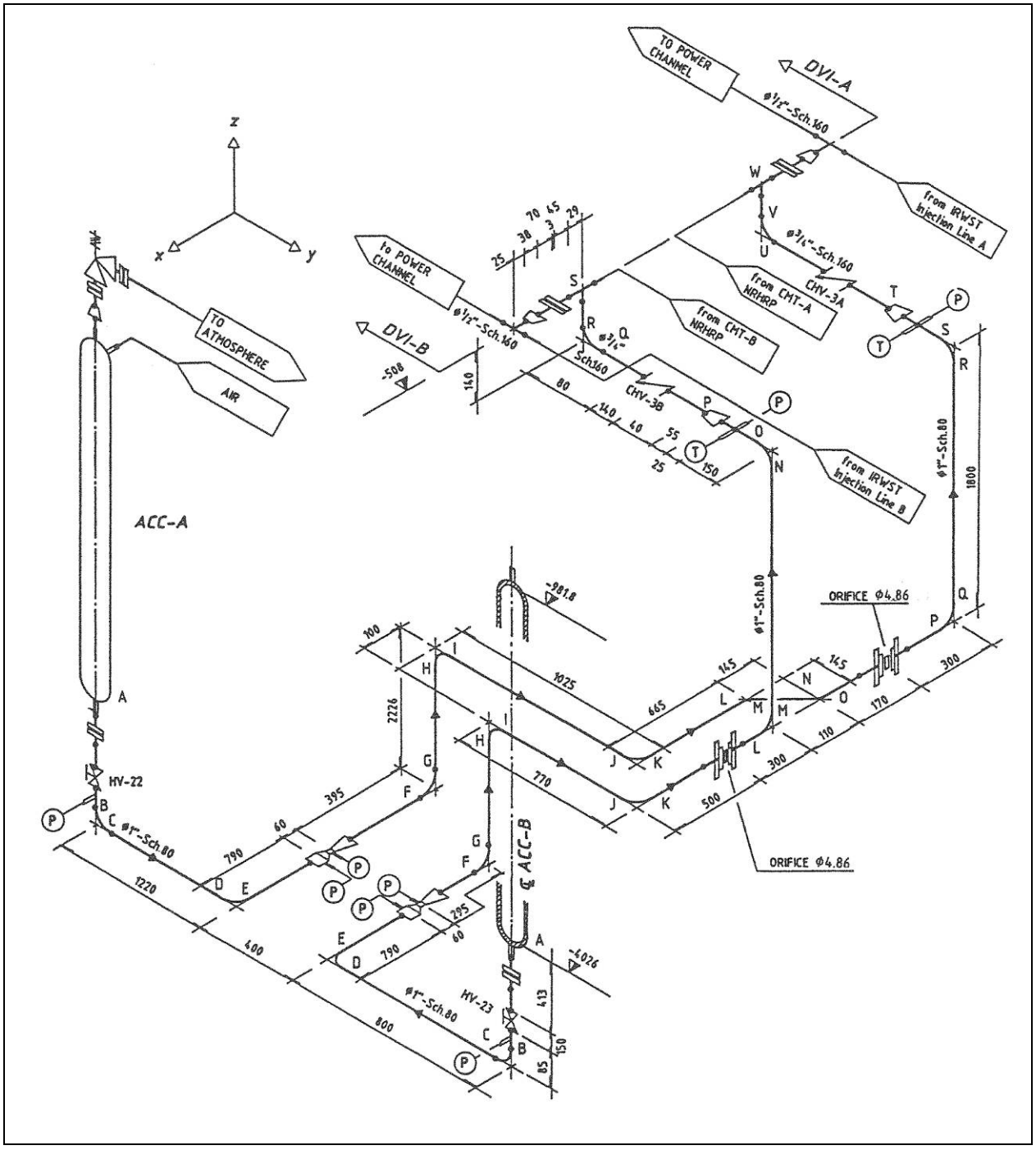

Fig.3. 24 – SPES-2 Accumulator injection line layout

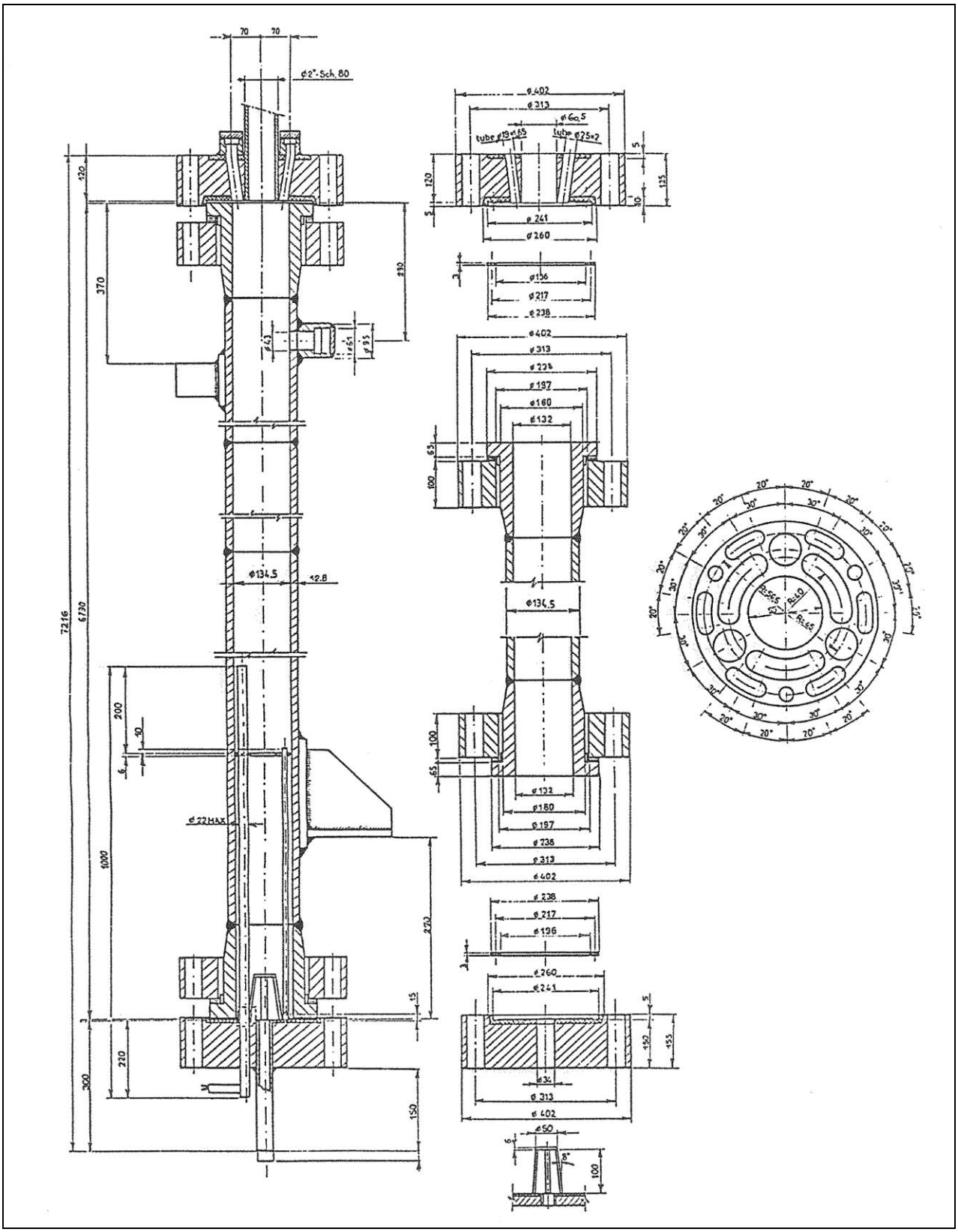

Fig.3. 25 – SPES-2 pressurizer

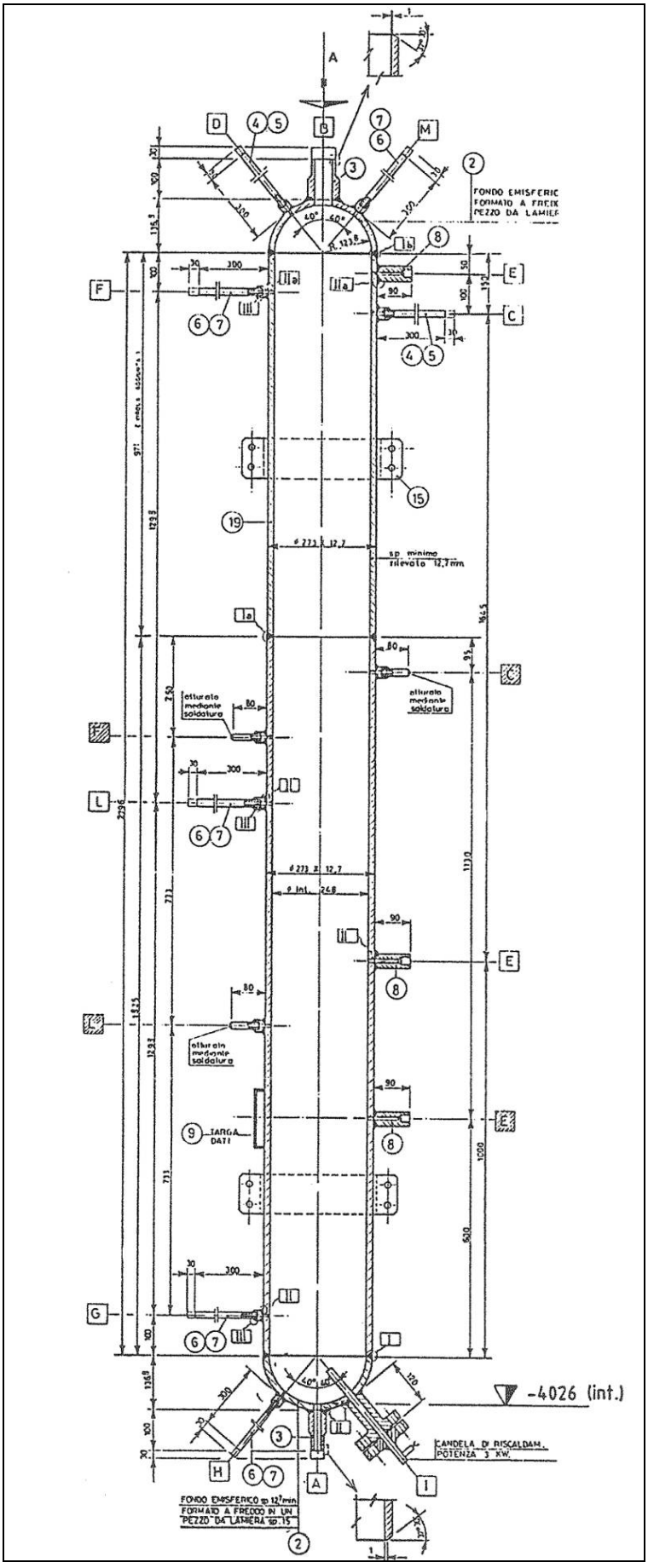

Fig.3. 26 – SPES-2 Accumulators

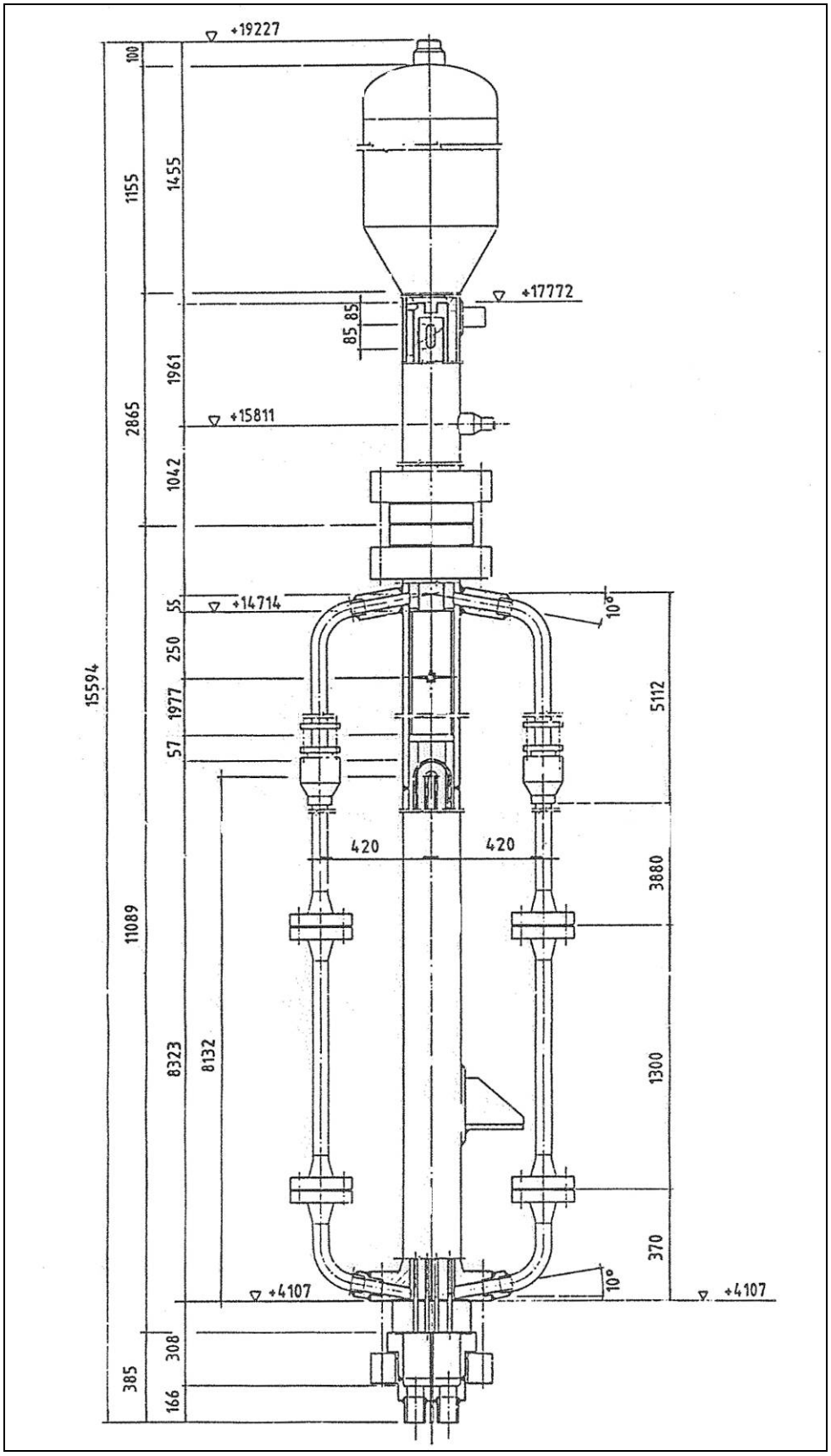

Fig.3. 27 – SPES-2 Steam Generator

Tube	R_m (mm)	Z_d (mm)	L_a (mm)	Elevation (mm)
1	21.5	8132	16331	8153
2	21.5	8132	16331	8153
3	30.4	8157	16409	8187
4	52.8	8182	16529	8234
5	52.8	8207	16579	8259
6	42.4	8231	16596	8273
7	42.4	8231	16596	8273
8	42.4	8231	16596	8273
9	42.4	8231	16596	8273
10	42.4	8231	16596	8273
11	67.3	8256	16724	8323
12	67.3	8256	16724	8323
13	67.3	8256	16724	8323

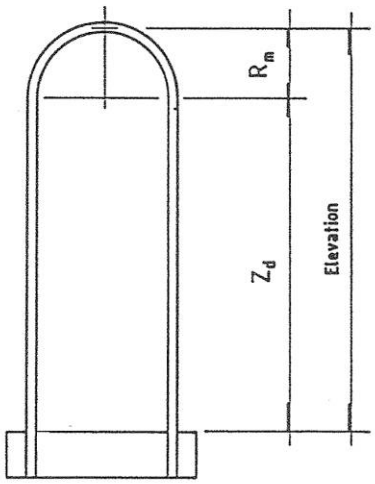

$$L_a = 2Z_d + \pi R_m$$

SG tube arrangement

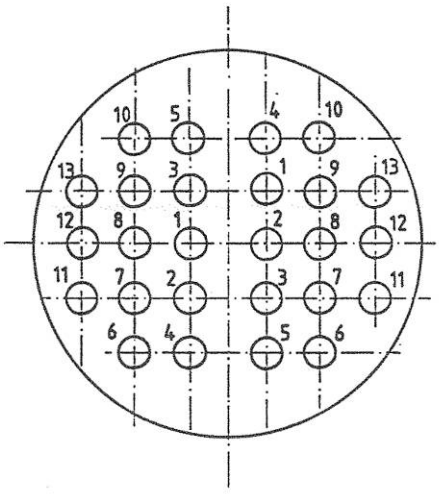

Fig.3. 28 – SPES-2 Steam Generator U-tubes

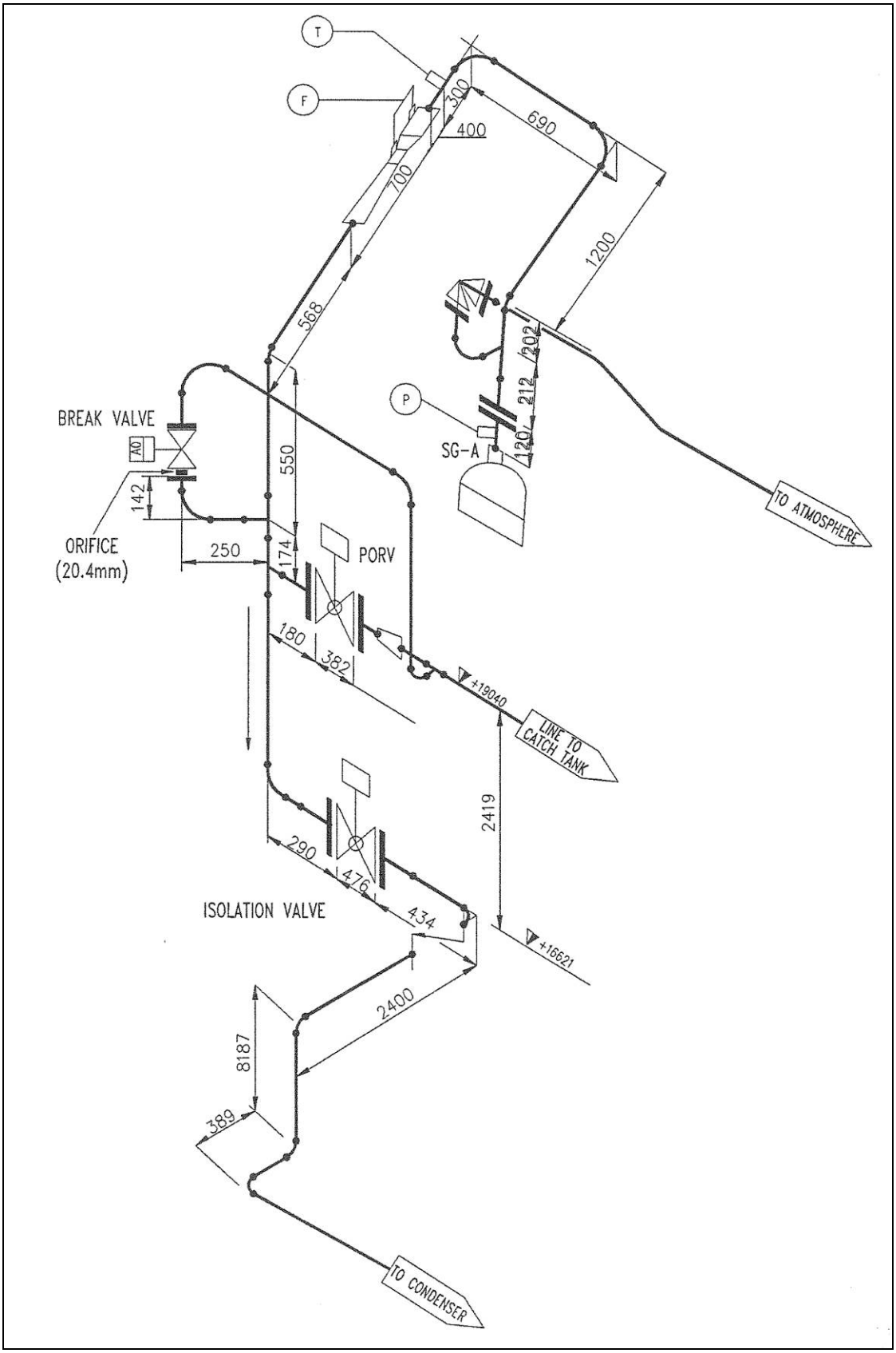

Fig.3. 29 – SPES-2 Main steam line-A

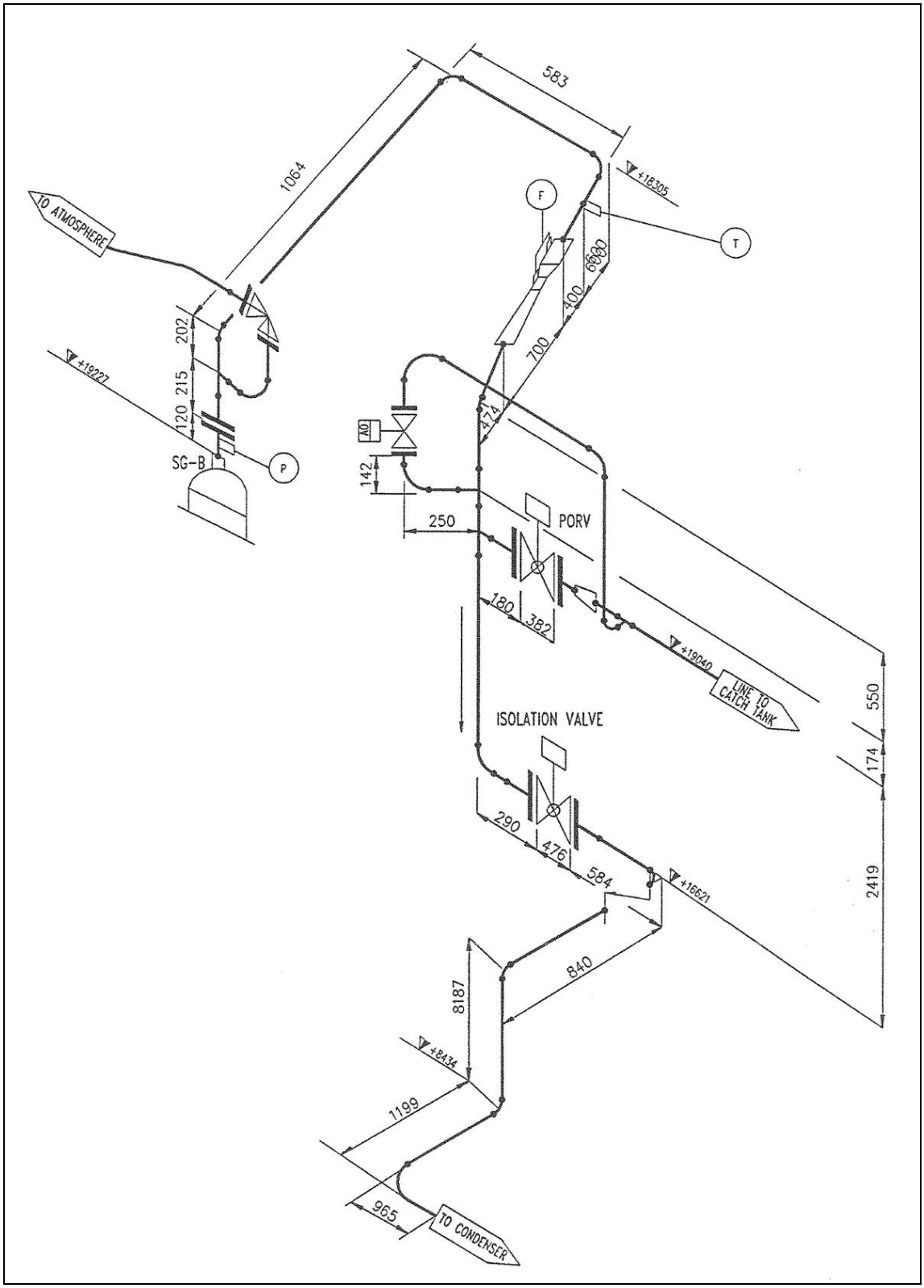

Fig.3. 30 – SPES-2 Main steam line-B

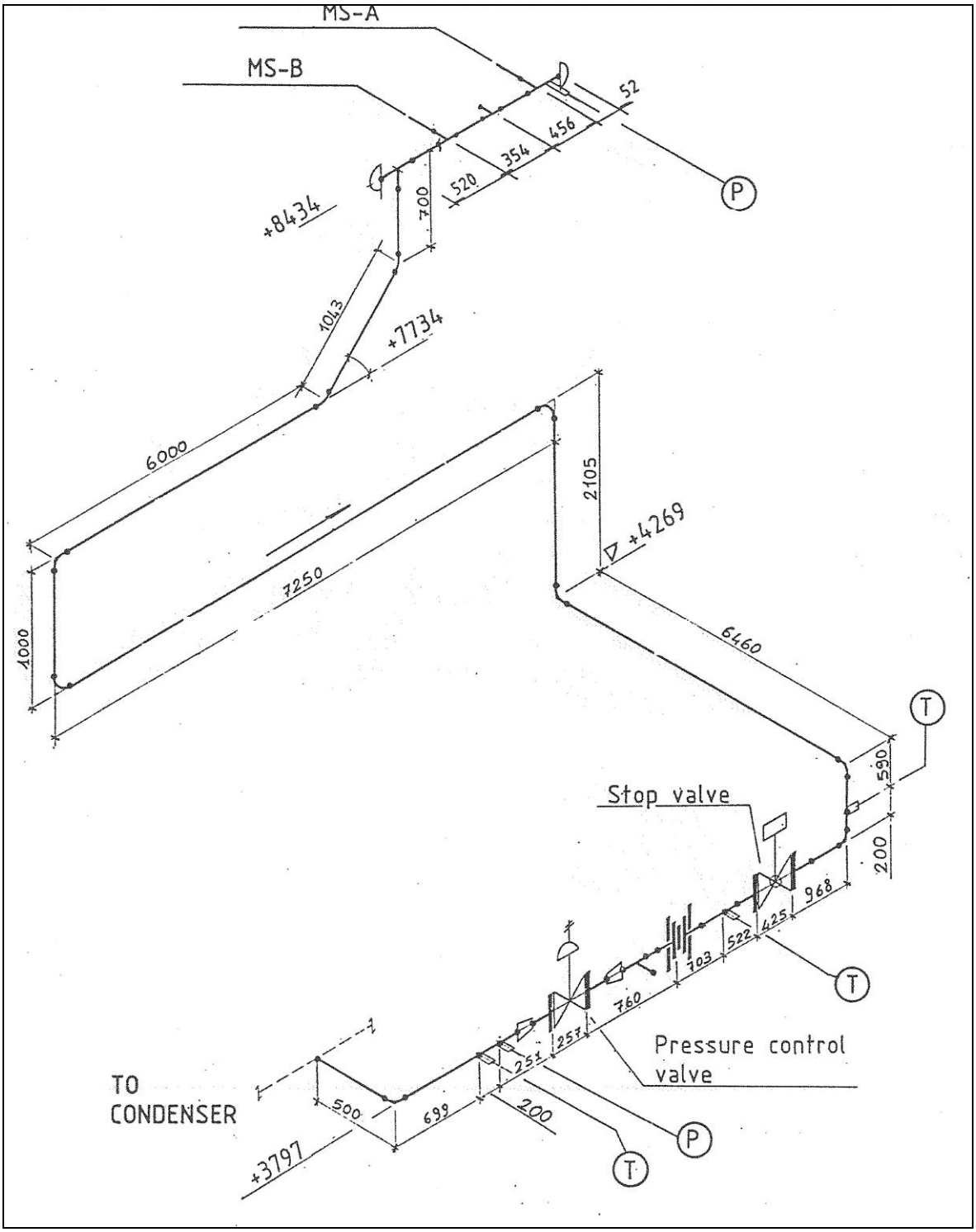

Fig.3. 31 – SPES-2 Main steam line header

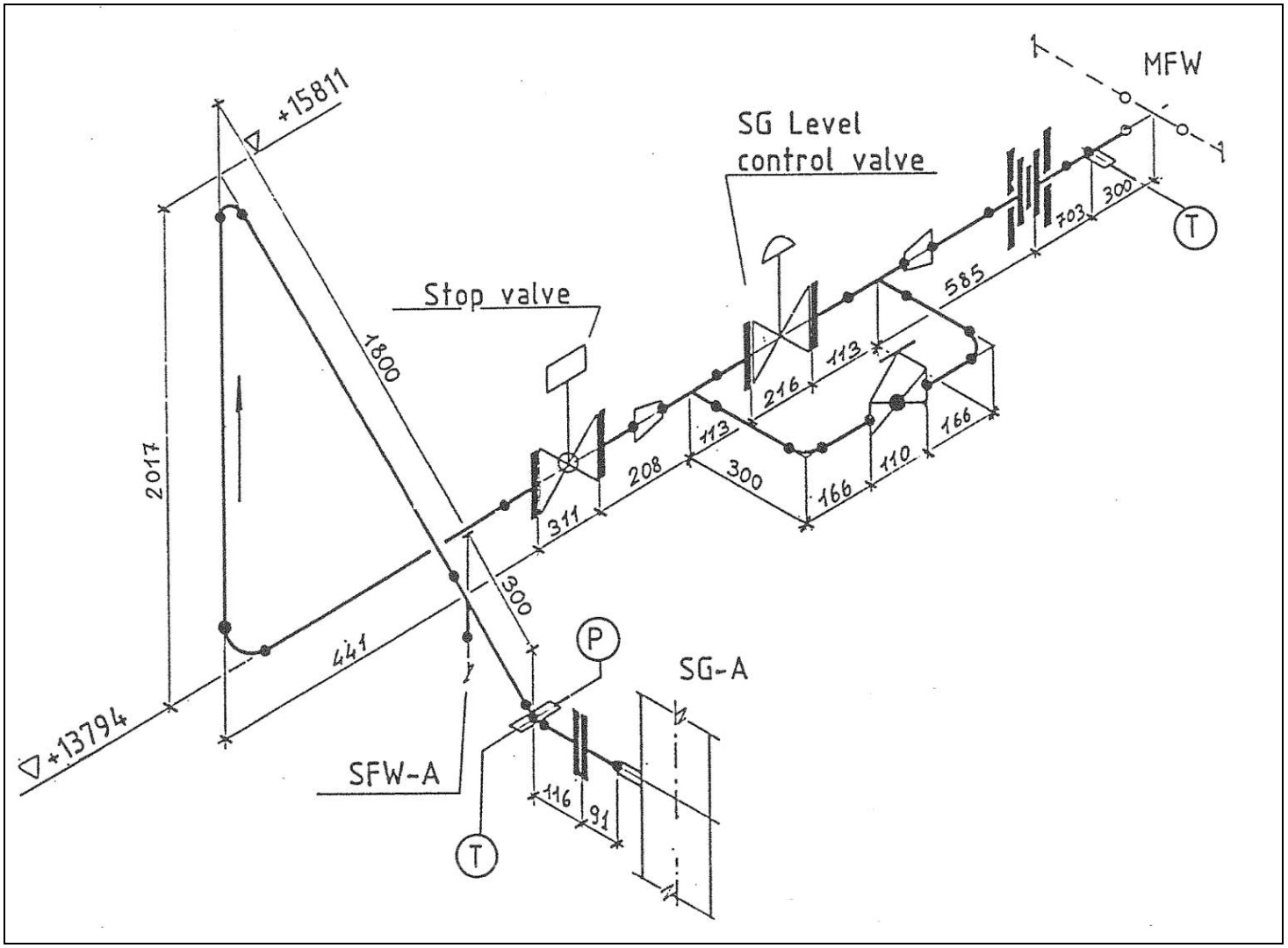

Fig.3. 32 – SPES-2 Main feedwater line-A

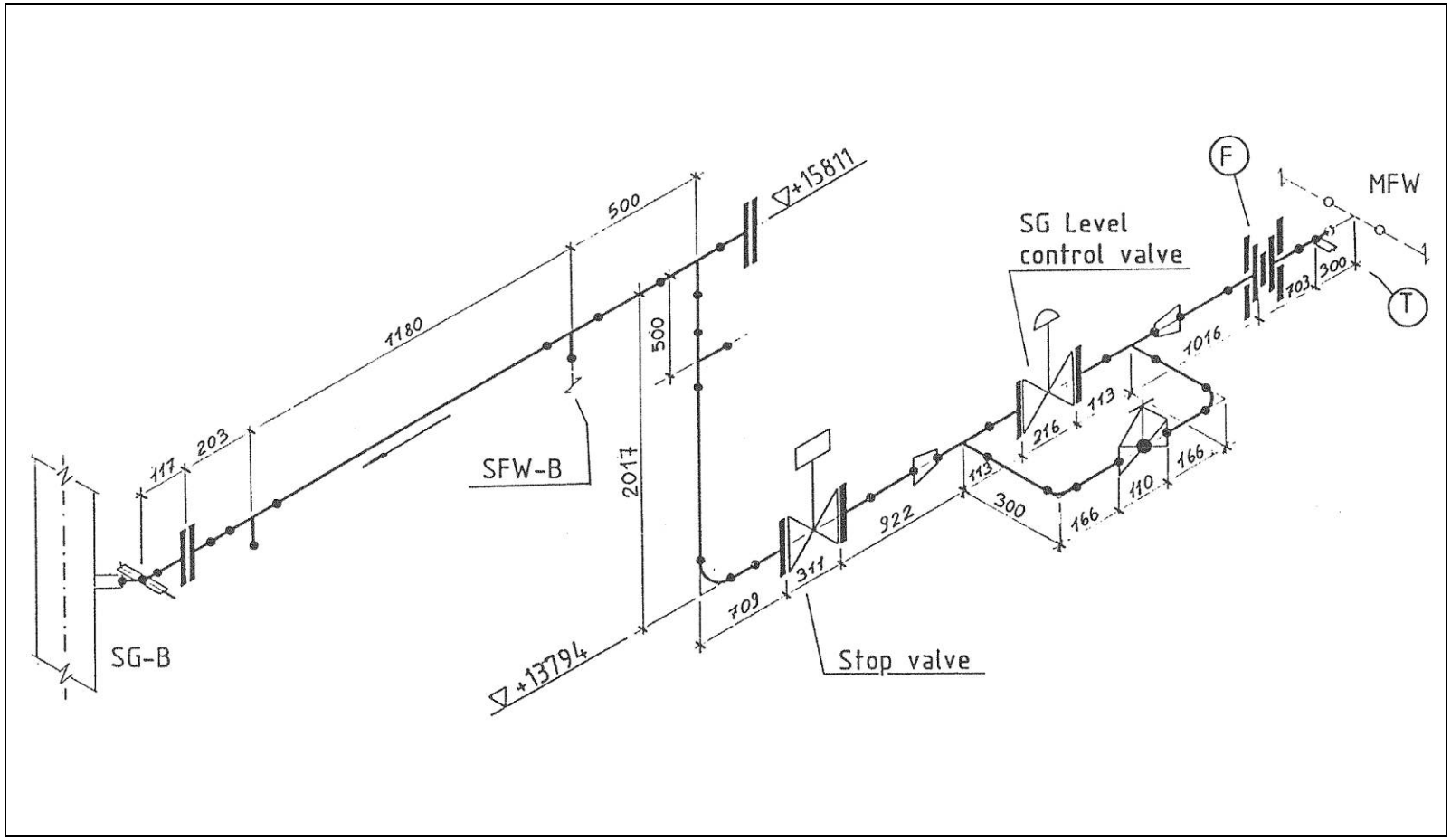

Fig.3. 33 – SPES-2 Main feedwater line-B

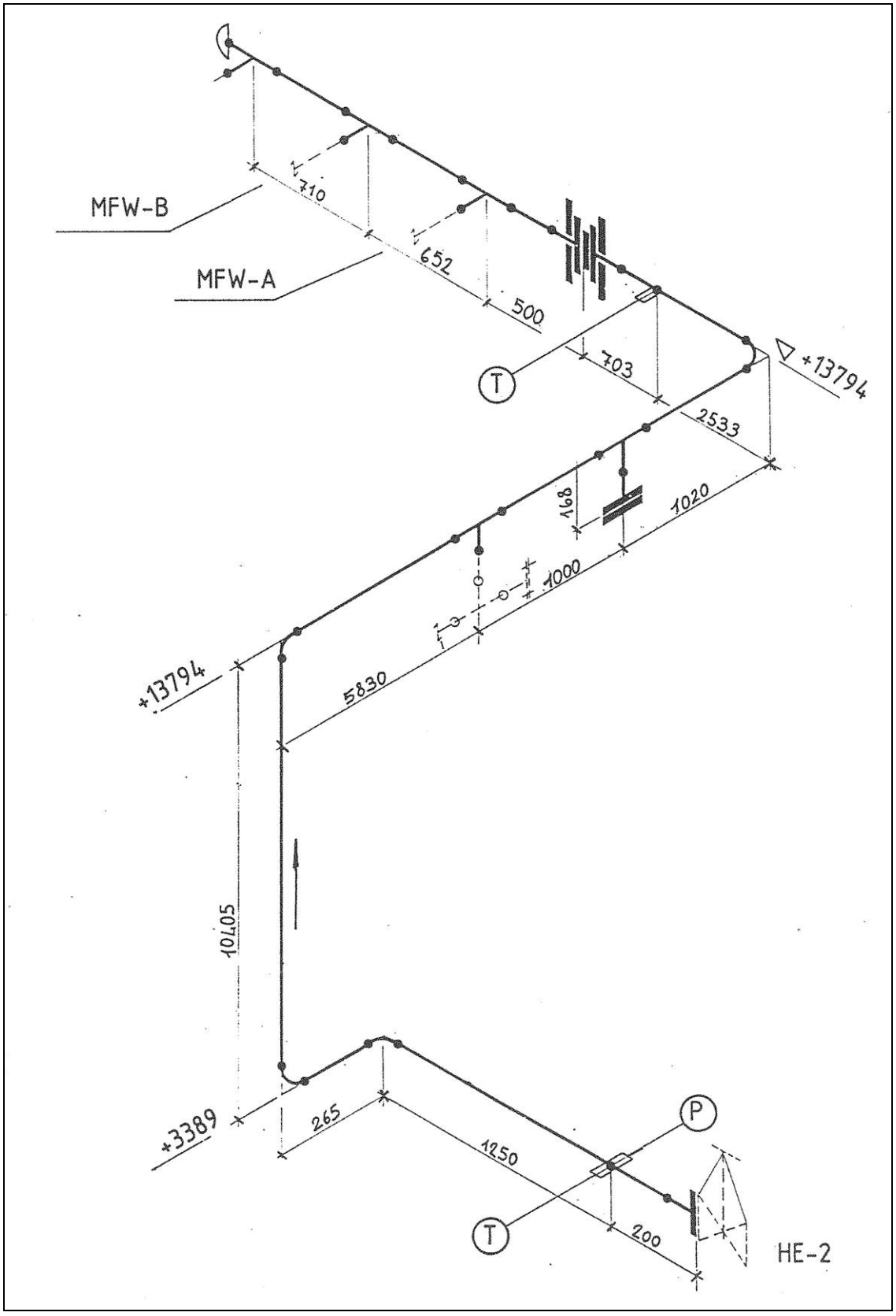

Fig.3. 34 – SPES-2 Main feedwater line header

4 SPES-2 FACILITY CONFORMITY TO THE EUROPEAN PRESSURE EQUIPMENT DIRECTIVE

Compliance to the present European pressure equipment directive is mandatory in Italy. The following paragraphs describe the way identified by SIET to re-operate the SPES-2 facility, in the SPES-99 configuration, according to the PED.

4.1 The European Pressure Equipment Directive

The European Directive 97/23/CE on pressure equipment was transposed in the Italian legislation by the Decree D.Lgs. n° 93 of February 25th 2000 [7].

The pressure equipments, designed and built according to PED, can be licensed and operated only after the CE stamp is provided. The CE stamp is released on the basis of a technical dossier including all information required by PED.

Before 2000, the law required for the pressure equipments a register number, released and recorded by ISPESL[4], The needed inspection and controls were scheduled and managed by ISPESL, in agreement with ASL[5]. In particular, two kinds of verifications were required:

- periodic operation verification;
- ten-year integrity verification with non destructive controls on tanks, internal inspection, thickness measures, hydraulic tests, etc.

The SPES-2 pressure tanks, simulating the AP-600 safety systems, were registered as reported in Tab.4. 1 and Fig.4. 1 and regularly checked until 1994.

Being the SPES-2 power channel, a high and thin component, it was assimilated to a pipe and no procedure to assign a register by ISPESL was actuated. ASL inspections, performed at the time, recorded the presence of the power channel, as belonging to the SPES-2 facility to provide power to the plant.

The present legislation classifies the SPES-2 power channel among the pressure vessels and obliges SIET to a regularization. To this end, SIET started a procedure, sided by an Italian certification body, ITALCERT, to be able to operate the component in the present or a modified configuration.

The available technical dossier of SPES and SPES-2 power channel does not include all the design, construction and control evidence documentation required by PED to assign the CE stamp.

The Article n. 10 of the D.Lgs. n° 93 of Feb. 25th 2000, at paragraph 7, foresees the possibility to ask the Italian Ministry of Economic Development the license to operate a pressure component, for which the PED requirements were not applied, with a limited use for experimentation, if safety is anyway guaranteed. The request must include the present configuration of the component and also the possible modifications that it can undergo.

ITALCERT has identified this option as one of the pursuable options to allow SIET to re-use the SPES-2 power channel, or a modified version of it, and has required for the component a series of safety evaluations for verifying the component stability in steady state at the design conditions, non-destructive controls and an hydraulic test.

Once available the derogation to D.Lgs. n° 93 by the Italian Ministry of Economic Development, or another formal authorization, SIET has to declare the SPES-2 power channel commissioning to INAIL[6] together with all the other components of the experimental facility.

The technical and administrative procedures to “legalize” the SPES-2 power channel require about one year since the request to Ministry.

4.2 SPES-2 power channel safety evaluation

A FEM analysis is the most suitable tool to verify the different parts of the power channel. As shown in Fig.4. 2, the following parts will be analyzed:

A Lower Plenum;

B Riser;

C Upper Plenum;

[4] former Italian institute for accident prevention and security at work, merged with INAIL afterwards

[5] local health institute

[6] Italian Institute for insurance and industrial injuries

D Upper Head;

E Tubular Downcomer.

For each of the above elements, the technical verification procedure includes:

- **The FEM model set up of:**
  a) Lower Plenum, with detailed modelling of opened nozzles and flanges;
  b) Riser with detailed modelling of the eleven flanged sections with bolts. Some simplification in the model will be adopted at the contact areas by joining, at the nodes, flanges elements to gasket elements. The isolation gasket in phlogopite mica will be modelled too by assigning thermal properties of mica, to simulate the thermal behaviour, and the same mechanical properties of stainless steel (elastic module and Poisson coefficient);
  c) Upper Plenum, with detailed modelling of opening, nozzles and flanges;
  d) Upper Head, with detailed modelling of opening, nozzles and flanges;
  e) Tubular Downcomer with detailed modelling of opening, nozzles, flanges and existing bellow (not reported in Fig.4. 2).
- **the thermal analysis in steady state at the design conditions:**
  this analysis allows to calculate the temperature distribution in the component walls at the design conditions. To this end, convection heat transfer with the inner fluid and conduction inside the walls will be considered;
- **system structural analysis at the design and hydraulic test conditions:**
  thermal loads, mechanical loads due to inner pressure and any other loads on the nozzles will be considered for the design conditions. For the hydraulic tests, inside pressure and wall at environment temperature will be taken into account. Non linear behaviour of the material and no transient conditions will be analyzed.
- **result post-processing and verification:**
  stresses and strains will be verified according to DBA (Design Basis Analysis) according to standard EN 13445-3.

The results of the FEM analysis should demonstrate the SPES-2 power channel compliance to EN 13445-3. If the standard requirements will not be satisfied for the present design conditions (20 MPa, saturation temperature 365.7 °C), it will be possible to downgrade the component to lower pressure (e.g. 18 MPa, saturation temperature 356.9 °C), being the foreseen boron dilution test performed at about 4 MPa pressure.

In case of power channel modification and replacement of some parts with other, more relevant to future experimentation goals, the new parts will be designed and built according to PED requirements and they will be cited in the derogation request to the Italian Ministry of Economic Development, as reported in Paragraph 4.1.

4.3 SPES-2 pressure tank integrity verification

In the SPES-99 configuration, the steam generators, pressurizer and the accumulators are the only pressure tanks, already registered at INAIL, used in the transient simulation. As the facility is not in operation since 1999, no periodical inspection has been performed up to now. In case of system restart, an integrity verification of these components will be necessary with an appropriate plan of controls to be defined in agreement with ITALCERT.

4.4 SPES-2 piping safety evaluations

The compliance of the SPES2 piping, in the SPES-99 configuration, with UNI EN 13480 standard has been performed by SIET with the Benthely AutoPipe code.

4.4.1 Overview on Autopipe verifications based on UNI EN 13480 standard

A short description of the evaluations that Autopipe code performs in order to verify whether the piping satisfy the UNI EN-13480 standard is reported in the following.

The Autopipe code allows load combinations, according to the UNI EN 13480 standard, and it compares the value of calculated stress with the allowable material stress using the Von Mises criteria. The allowed load conditions are: hydrostatic head (gravity), piping dead weight and its content, pressure and temperature, hydrostatic test.

In detail the verifications are:

Maximum allowable stress

(from UNI EN 13480-3 standard)

For materials, other than austenitic steels (used in the secondary side), the design stress shall be in accordance with the following formula:

$$f = \min\left(\frac{\mathrm{ReHt}}{1.5} or \frac{\mathrm{Rp0.2t}}{1.5}; \frac{\mathrm{Rm}}{2.4}\right),$$

Where:

R_{eHt} minimum specified value of upper yield strength at calculation temperature, when temperature is greater than room temperature.

$R_{p0.2t}$ is the minimum proof yield strength to produce 0.2% deformation at mean wall design temperature.

R_m tensile strength.

For austenitic steels with elongation A>35%, the design stress must be in accordance with 5.2.2-1 of UNI EN 13480-3 standard, that is:

$$f = \frac{R_{p1,0t}}{1.5}$$

where $R_{p1,0t}$ is the minimum proof yield strength to produce 1% deformation at mean wall design temperature.

Stress due to sustained loads

The sum of primary stresses, σ1, due to calculation pressure, p_c, and the resultant bending moment, M_A, from weight and other sustained mechanical loads ***(SUS***) shall satisfy the following equation:

$$\sigma_1 = \frac{p_c * d_o}{4 * e_n} + \frac{0.75 * i * M_A}{Z} \leq k * f_h$$

where:

M_A is the resultant bending moment from the sustained mechanical loads, determined by using the most unfavourable combination of the following loads:
- piping dead weight including insulation, internals and attachments;
- weight of fluid;
- internal pressure forces due to unrelieved axial expansion joints, etc.

i the stress intensification factor;

z joint efficiency (1 for seamless tubes);

d_o outlet pipe diameter;

e_n nominal pipe thickness.

k *coefficient depending on occasional load acting time (1 in SPES2 case) .*

f_h *allowable stress at maximum metal temperature consistent with the loading under consideration.*

Stress range due to thermal expansion and alternating loads
The stress range, σ_3, due to the resultant moment, M_C, from thermal expansion and alternating loads, e.g. seismic loads, ***(Amb+T$_j$)***, shall satisfy the following equation:

$$\sigma_3 = \frac{i * M_C}{Z} \leq f_a$$

In addition, a loads combination including the "**Maximum range combination**" has been taken into account. Such a case considers the results of maximum thermal range of the applied load combinations (e.g. temperatures $T_1 \div T_n$) and ***(Amb+T$_j$)*** with T_i one of the considered temperatures.

Hydraulic Test (Hydrotest)

This test is performed at room temperature. Test pressure is 1.43xPS (1.5xPS used in the calculations).

Stress calculated with this pressure value, considering loads on piping, shall not exceed the maximum allowable stress calculated by 5.2.2-1 of UNI EN 13480-3 standard.

Hoop stress (max. P$_1$)

Hoop stress is the circumferential stress acting on a cylinder subjected to internal or external pressure.

$$\sigma_{hoop} = \frac{p_{max} D_o}{2 e_h z} - \frac{p_{max} Y}{z} \leq f$$

where:

p_{max} maximum pressure

Y hoop stress coefficient (0.5 default);

z joint efficiency (1 for seamless tubes);

D_o outlet pipe diameter;

e_h reduced pipe thickness (e_n-c_0-c_1), where:

e_n nominal pipe thickness;

c_0 corrosion tolerance;

c_1 absolute value of negative tolerance on thickness (from material standard or declared by manufacturer);

f allowable stress.

Creep stress (Creep Rupture)

The formula, by 5.3.2-1 of UNI EN 13480-3 standard ***(SUS+Ti***), is:

$$f_{CR} = \frac{S_{R\,Tt}}{SF_{CR}}$$

where:

S_{RTt} is the mean value of the allowable stress for creep failure.

SF_{CR} is the safety factor that depends on time and must be in accordance with table 5.3.2-1 of UNI EN 13480-3 standard.

The UNI EN 13480:2002 standard does not permit to ignore the creep stress, but creep effects are negligible for plant lifetime and temperature lower than 100,000 h and 550°C respectively. Since these values largely exceed those expected for SPES-2, the creep stress verification is not required.

Fatigue Verification:
Not applicable because the expected cycle number is < 1000

In the aforementioned verifications, seismic, wind and snow loads have not been considered, because the facility is hosted inside the "Centrale Emilia" building[7], and the probability to have an earthquake during the SPES-2 operation is very low. Also the dynamic or alternative loads have not been taken into account, because not applicable.

4.4.2 Piping modelling criteria

Hot legs, cold legs, pump suction pipes, PRZ surge line, DVI and Accumulator injection lines of SPES-2 primary system have been verified in various component design conditions, whereas the steam lines and feedwater lines of the secondary system have been assessed at their design conditions (10 MPa, 310 °C), which are lower than the SG design parameters, overdesigned for ISPESL request.

Piping data - material, geometry, size - lay-out scheme and design conditions have been modelled according to the information reported in [7], The starting and final points of the pipes at the connection with the plant component have been considered as fixed points (simulated with an anchor type support). A vertical displacement, evaluated at the design conditions, has been imposed to such anchor type supports to simulate the thermal deformation of the component containing the nozzle which the pipe is connected to. The displacement is estimated with respect to the component support point.

During the SPES-2 installation phase, some pipes were pre-charged in order to reduce the stress. Pre-charge has been also simulated with Autopipe code. The value of the applied pre-charge has been evaluated with Autopipe as follows. A calculation has been run by eliminating the gravity contribution by the code load combination, and also eliminating the support in the point of the pre-charge application. The 70% of the obtained free displacement value has been imposed to the anchor support and a new calculation has been run at standard code load condition combination. Pipe stress compliance to standard has been verified.

When the information on piping support position and type was not exhaustive in [7], on-site inspections allowed to find the exact piping layout to be simulated.

Devices like flowmeters, venturimeters etc., have not been simulated, as their influence on pipe stress can be considered negligible. On the other hand, valve data (weight and dimensions) have been taken from commercial catalogues of similar valves. We assume that uncertainties related to such data slightly affect the results.

In some cases, stress limit values have been reached, as underlined by Autopipe code, so some pipe lines have not satisfied the UNI EN 13480 standard. This is due to the different acceptance limit between the Autopipe code (based on UNI EN 13480 standard) and the previously adopted design criteria. In fact, SPES-2 was designed according to ASME standards, while Autopipe verification is consistent with PED and the recognized standard for piping UNI EN 13480.

In those cases where piping resulted not verified at the design conditions, further calculations were performed at downgraded conditions until they were verified in agreement to UNI EN 13480 standard. The results are reported in the followings for all the calculated cases.

4.4.3 Hot and cold leg safety evaluation

Hot and cold legs geometries, sizes and three-dimensional arrangements have been reproduced starting from RPV flange, piping side, and finishing at SGs inlet point according to data reported in [7]. As already said, the starting and final point of each line have been modelled with an anchor with assigned displacements. In particular, the displacement on RPV side reproduces the thermal elongation from the supports to the nozzle elevation on component, while the displacement due to piping pre-charge, calculated as described above, has been imposed at the SG inlet. The AutoPipe model is reported in Fig.4. 3.
The hot leg and the cold leg lines do not satisfy the UNI EN 13480 standard at the design conditions (20 MPa, 365 °C) because of the different acceptance criteria of design codes used (ASME standards and PED). Tab.4. 3 reports the calculation results at the initial design conditions. Being either the hot and cold legs short and large pipes, pre-charge on the constraints is necessary to get the pipes verified.

[7] the building housed an old thermal plant that was dismantled

Downgraded conditions, satisfied by the hot and cold legs, have been found and the verification results are reported in Tab.4. 2.

4.4.4 Pump suction pipe safety evaluation

The pump suction pipe verification results are reported in Tab.4. 4 and the AutoPipe model is shown in Fig.4. 4. Being the pump suction pipes short and large, pre-charge on the constraints is necessary to get the pipes verified. In the model a pre-charge is applied at the connection points to SGs, while the connection point to the pump is considered a fixed point.

4.4.5 PRZ surge line safety evaluation

The PRZ surge line verification results are reported in Tab.4. 5. The line satisfies the UNI EN 13480 standard at the design conditions. In the AutoPipe model, shown in Fig.4. 5, the terminal points of the line have been represented by anchors with imposed displacements. The displacement applied to the lowest point (connection to HL-A) is equal to the hot leg-A displacement calculated at the point where the surge line is connected, whereas the displacement applied to the highest point (connection to PRZ) is equal to the thermal displacement with respect to the PRZ support elevation.

4.4.6 The DVI lines and the accumulator injection lines safety evaluation

The DVI-A and B lines and accumulator injection ACC-A and B lines satisfy the standard at the design conditions. The verification results are reported in Tab.4. 6. The AutoPipe model is reported in Fig.4. 6. Displacements due to the RPV thermal expansion have been imposed to the highest points, while displacement due to accumulator thermal expansions have been imposed to the lowest points.

4.4.7 The steam line safety evaluation

Due to the low flexibility of SL-A configuration, that line does not satisfy the standard at the design conditions, due to the thermal expansion in proximity of the “U-shape” portion. The conditions are met in downgraded conditions (8 MPa, 295°C) that, in any case, are much higher than the operating ones (4.9 MPa) during the boron dilution test. The steam line-A verification results for downgraded conditions are reported in Tab.4. 8, while the AutoPipe model is reported in Fig.4. 7.

The steam line B is verified at the design conditions, due to piping configuration that allows more flexibility. The steam line B verification results are reported in Tab.4. 9, while the AutoPipe model is shown in Fig.4. 8.

4.4.8 The feedwater line safety evaluation

The feedwater line-A and B verification results are reported in Tab.4. 10 and Tab.4. 11 for the design and verified conditions, respectively. The AutoPipe model is reported in Fig.4. 9. The lines satisfy the UNI EN 13480 standard at the same conditions of the steam line A (80 bar, 295°C).

4.4.9 Safety evaluation conclusions

On the basis of the above described verification, the maximum operating conditions for the primary loop are 17.25 MPa and 353 °C, due to the Hot Leg and Cold Leg limitations.

The maximum operating conditions for the secondary loops are 8 MPa and 295 °C, due to the Steam Line A limitation.

Tab.4. 1 – SPES-2 pressure tank register

Position [8]	Register N. and Manufacturer	Description	Volume (m^3)	Design conditions
1	-------	RPV – Power channel	0.21875	P 20 MPa; T 364.9 °C water and steam
2	CR 726/84 Villa scambiatori	Pressurizer	0.0954	P 20 MPa; T 364.9 °C water and steam
3.1	CR 337/85 Villa scambiatori	Steam Generator-A	Primary side - 13 tubes 0.00743 (in+out plenum) Secondary side - shell 0.388	Primary side – tubes: P 20 MPa, T 365 °C Secondary side - shell P 20 MPa, T 365 °C water and steam
3.2	CR 338/85 Villa scambiatori	Steam Generator-B	Primary side - 13 tubes 0.00743 (in+out plenum) Secondary side - shell 0.388	Primary side - tubes P 20 MPa, T 365 °C Secondary side - shell P 20 MPa, T 365 °C water and steam
4.1	CR 80/93 Villa scambiatori	CMT-A	Outer shell 0.537; Inner shell 0.143	Outer shell P 7.3 MPa, T 200 °C, air; Inner shell P 11.9 MPa, T 350 °C water and steam
4.2	CR 81/93 Villa scambiatori	CMT-B	Outer shell 0.537; Inner shell 0.143	Involucro esterno P 7.3 MPa, T 200 °C, air; Involucro interno P 11.9 MPa, T 350 °C water and steam
5.1	CR 707/84 Villa scambiatori	Accumulator-A	0.143	nitrogen/water P 11.6 MPa, T 350 °C
5.2	CR 649/84 Villa scambiatori	Accumulator-B	0.143	nitrogen/water P 11.6 MPa, T 350 °C

[8] See Fig.4. 1.

Tab.4. 2 – Hot legs and cold legs safety evaluation results at verified conditions

Hot and cold Legs
Verified case
Design Pressure: 172.5 bar
Design Temperature: 353.49 °C

CODE COMPLIANCE COMBINATIONS

Combination	Category	Method	Case/Combination	Factor	M/S K-Factor	(N/mm2)	D/A/P
GR + Max P{1}	Sustain	Sum	GR[1]	1.00		Automatic	Y Y Y
			Max Long	1.00			
Max Range	Expansion	Sum	Temp. Range	1.00		Automatic	Y Y Y
Amb to T1{1}	Expansion	Sum	T1[1]	1.00		Automatic	Y Y Y
Hydrotest{1}	Occasion	Sum	HY[1]	1.00	1.000	Automatic	Y Y Y
			Max Long	1.00			
Max P{1}	Hoop	Sum	Max Hoop	1.00		Automatic	Y Y Y
Sus.+T1{1}	Creep Rupt	Sum	Max Sus	1.00		Automatic	Y Y Y
			T1[1]		1.00		

R E S U L T S U M M A R Y

Maximum sustained stress ratio

Point		: E00
Stress	N/mm2	: 63
Allowable	N/mm2	: 107
Ratio		: 0.58
Load combination		: GR + Max P{1}

Maximum displacement stress ratio

Point		: A17
Stress	N/mm2	: 191
Allowable	N/mm2	: 198
Ratio		: 0.97
Load combination		: Max Range

Maximum occasional stress ratio

Point		: E00
Stress	N/mm2	: 89
Allowable	N/mm2	: 223
Ratio		: 0.40
Load combination		: Hydrotest{1}

Maximum hoop stress ratio

Point		: A17
Stress	N/mm2	: 106
Allowable	N/mm2	: 107
Ratio		: 0.99
Load combination		: Max P{1}

Maximum creep rupture stress ratio

Point		: A17
Stress	N/mm2	: 100
Allowable	N/mm2	: 0 < See Note 1 >
Ratio		: 0.00
Load combination		: Sus.+T1{1}

* * * The system satisfies EN 13480 (2002) code requirements * * *
* * * for the selected options * * *

Warnings:
(1) Maximum creep rupture stress ratio is zero

* * * Note 1: Points were found in this stress category with * * *
* * * mechanical properties outside of temperature range. No * * *

Tab.4. 3 – Hot legs and cold legs safety evaluation results at SPES-2 design condition

Hot and cold Legs
Design Case
Design Pressure: 200 bar
Design Temperature: 365 °C

CODE COMPLIANCE COMBINATIONS

<Description> Combination	Category	Method	Case/Combination	Factor	M/S	K-Factor	Allowable (N/mm2)	D/A/P
GR + Max P{1}	Sustain	Sum	GR[1]	1.00			Automatic	Y Y Y
			Max Long	1.00				
Max Range	Expansion	Sum	Temp. Range	1.00			Automatic	Y Y Y
Amb to T1{1}	Expansion	Sum	T1[1]	1.00			Automatic	Y Y Y
Hydrotest{1}	Occasion	Sum	HY[1]	1.00		1.000	Automatic	Y Y Y
			Max Long	1.00				
Max P{1}	Hoop	Sum	Max Hoop	1.00			Automatic	Y Y Y
Sus.+T1{1}	Creep Rupt	Sum	Max Sus	1.00			Automatic	Y Y Y
			T1[1]	1.00				

R E S U L T S U M M A R Y

Maximum sustained stress ratio

Point : E00
Stress N/mm2 : 71
Allowable N/mm2 : 106
Ratio : 0.67
Load combination : GR + Max P{1}

Maximum displacement stress ratio

Point : F01
Stress N/mm2 : 83
Allowable N/mm2 : 202
Ratio : 0.41
Load combination : Max Range

Maximum occasional stress ratio

Point : E00
Stress N/mm2 : 102
Allowable N/mm2 : 223
Ratio : 0.46
Load combination : Hydrotest{1}

Maximum hoop stress ratio

Point : B14
Stress N/mm2 : 123
Allowable N/mm2 : 106
Ratio : 1.16
Load combination : Max P{1}

Maximum creep rupture stress ratio

Point : B14
Stress N/mm2 : 77
Allowable N/mm2 : 0 < See Note 1 >
Ratio : 0.00
Load combination : Sus.+T2{1}

* * * The system does not satisfy EN 13480 (2002) code requirements * * *
* * * for the selected options * * *

Warnings:
(1) Maximum creep rupture stress ratio is zero

* * * Note 1: Points were found in this stress category with * * *
* * * mechanical properties outside of temperature range. No * * *

Tab.4. 4 – Pump suction pipes safety evaluation results

Pump Suction A and B
Design Case
Design Pressure: 200 bar
Design Temperature: 365 °C

CODE COMPLIANCE COMBINATIONS

<Description> Combination	Category	Method	Case/Combination	Factor	M/S	K-Factor	Allowable (N/mm2)	D/A/P
GR + Max P{1}	Sustain	Sum	GR[1]	1.00			Automatic	Y Y Y
			Max Long	1.00				
Max Range	Expansion	Sum	Temp. Range	1.00			Automatic	Y Y Y
Amb to T1{1}	Expansion	Sum	T1[1]	1.00			Automatic	Y Y Y
Hydrotest{1}	Occasion	Sum	HY[1]	1.00		1.000	Automatic	Y Y Y
			Max Long	1.00				
Max P{1}	Hoop	Sum	Max Hoop	1.00			Automatic	Y Y Y
Sus.+T1{1}	Creep Rupt	Sum	Max Sus	1.00			Automatic	Y Y Y
			T1[1]	1.00				

R E S U L T S U M M A R Y

Maximum sustained stress ratio

Point : A04
Stress N/mm2 : 48
Allowable N/mm2 : 99
Ratio : 0.49
Load combination : GR + Max P{1}

Maximum displacement stress ratio

Point : A13
Stress N/mm2 : 112
Allowable N/mm2 : 203
Ratio : 0.55
Load combination : Max Range

Maximum occasional stress ratio

Point : A04
Stress N/mm2 : 72
Allowable N/mm2 : 228
Ratio : 0.32
Load combination : Hydrotest{1}

Maximum hoop stress ratio

Point : B04
Stress N/mm2 : 99
Allowable N/mm2 : 99
Ratio : 1.00
Load combination : Max P{1}

Maximum creep rupture stress ratio

Point : A13
Stress N/mm2 : 82
Allowable N/mm2 : 0 < See Note 1 >
Ratio : 0.00
Load combination : Sus.+T1{1}

* * * The system satisfies EN 13480 (2002) code requirements * * *
* * * for the selected options * * *

Warnings:
(1) Maximum creep rupture stress ratio is zero

* * * Note 1: Points were found in this stress category with * * *
* * * mechanical properties outside of temperature range. No * * *

Tab.4. 5 – PRZ surge line safety evaluation results

Surge Line
Design Case
Design Pressure: 200 bar
Design Temperature: 365 °C

CODE COMPLIANCE COMBINATIONS

<Description> Combination	Category	Method	Case/Combination	Factor	M/S	K-Factor	Allowable (N/mm2)	D/A/P
GR + Max P{1}	Sustain	Sum	GR[1]	1.00			Automatic	Y Y Y
			Max Long	1.00				
Max Range	Expansion	Sum	Temp. Range	1.00			Automatic	Y Y Y
Amb to T1{1}	Expansion	Sum	T1[1]	1.00			Automatic	Y Y Y
Hydrotest{1}	Occasion	Sum	HY[1]	1.00		1.000	Automatic	Y Y Y
			Max Long	1.00				
Max P{1}	Hoop	Sum	Max Hoop	1.00			Automatic	Y Y Y
Sus.+T1{1}	Creep Rupt	Sum	Max Sus	1.00			Automatic	Y Y Y
			T1[1]	1.00				

R E S U L T S U M M A R Y

Maximum sustained stress ratio

Point : A00
Stress N/mm2 : 69
Allowable N/mm2 : 99
Ratio : 0.70
Load combination : GR + Max P{1}

Maximum displacement stress ratio

Point : A05 N
Stress N/mm2 : 12
Allowable N/mm2 : 203
Ratio : 0.06
Load combination : Max Range

Maximum occasional stress ratio

Point : A00
Stress N/mm2 : 91
Allowable N/mm2 : 228
Ratio : 0.40
Load combination : Hydrotest{1}

Maximum hoop stress ratio

Point : A00
Stress N/mm2 : 67
Allowable N/mm2 : 99
Ratio : 0.68
Load combination : Max P{1}

Maximum creep rupture stress ratio

Point : A00
Stress N/mm2 : 72
Allowable N/mm2 : 0 < See Note 1 >
Ratio : 0.00
Load combination : Sus.+T1{1}

* * * The system satisfies EN 13480 (2002) code requirements * * *
* * * for the selected options * * *

Warnings:
(1) Maximum creep rupture stress ratio is zero

* * * Note 1: Points were found in this stress category with * * *
* * * mechanical properties outside of temperature range. No * * *

Tab.4. 6 – Accumulator injection lines and DVI lines safety evaluation results

Accumulator and DVI Lines
Design Case
Design Pressure: 116 bar
Design Temperature: 350 °C

CODE COMPLIANCE COMBINATIONS

<Description> Combination	Category	Method	Case/Combination	Factor	M/S	K-Factor	Allowable (N/mm2)	D/A/P
GR + Max P{1}	Sustain	Sum	GR[1]	1.00			Automatic	Y Y Y
			Max Long	1.00				
Max Range	Expansion	Sum	Temp. Range	1.00			Automatic	Y Y Y
Amb to T1{1}	Expansion	Sum	T1[1]	1.00			Automatic	Y Y Y
Hydrotest{1}	Occasion	Sum	HY[1]	1.00		1.000	Automatic	Y Y Y
			Max Long	1.00				
Max P{1}	Hoop	Sum	Max Hoop	1.00			Automatic	Y Y Y
Sus.+T1{1}	Creep Rupt	Sum	Max Sus	1.00			Automatic	Y Y Y
			T1[1]	1.00				

R E S U L T S U M M A R Y

Maximum sustained stress ratio

Point : A26
Stress N/mm2 : 64
Allowable N/mm2 : 107
Ratio : 0.60
Load combination : GR + Max P{1}

Maximum displacement stress ratio

Point : B20
Stress N/mm2 : 177
Allowable N/mm2 : 220
Ratio : 0.81
Load combination : Max Range

Maximum occasional stress ratio

Point : A26
Stress N/mm2 : 74
Allowable N/mm2 : 247
Ratio : 0.30
Load combination : Hydrotest{1}

Maximum hoop stress ratio

Point : B31
Stress N/mm2 : 43
Allowable N/mm2 : 107
Ratio : 0.40
Load combination : Max P{1}

Maximum creep rupture stress ratio

Point : B20
Stress N/mm2 : 77
Allowable N/mm2 : 0 < See Note 1 >
Ratio : 0.00
Load combination : Sus.+T1{1}

* * * The system satisfies EN 13480 (2002) code requirements * * *
* * * for the selected options * * *

Warnings:
(1) Maximum creep rupture stress ratio is zero

* * * Note 1: Points were found in this stress category with * * *
* * * mechanical properties outside of temperature range. No * * *

Tab.4. 7 – Main steam line-A safety evaluation results at verified conditions

Main SLA
Verified case
Design Pressure: 80 bar
Design Temperature: 295 °C

CODE COMPLIANCE COMBINATIONS

Combination	Category	Method	Case/Combination	Factor	M/S	K-Factor	(N/mm2)	D/A/P
GR + Max P{1}	Sustain	Sum	GR[1]	1.00			Automatic	Y Y Y
			Max Long	1.00				
Max Range	Expansion	Sum	Temp. Range	1.00			Automatic	Y Y Y
Amb to T1{1}	Expansion	Sum	T1[1]	1.00			Automatic	Y Y Y
Hydrotest{1}	Occasion	Sum	HY[1]	1.00		1.000	Automatic	Y Y Y
			Max Long	1.00				
Max P{1}	Hoop	Sum	Max Hoop	1.00			Automatic	Y Y Y
Sus.+T1{1}	Creep Rupt	Sum	Max Sus	1.00			Automatic	Y Y Y
			T1[1]	1.00				

R E S U L T S U M M A R Y

Maximum sustained stress ratio

Point : A08
Stress N/mm2 : 101
Allowable N/mm2 : 102
Ratio : 0.99
Load combination : GR + Max P{1}

Maximum displacement stress ratio

Point : A14 F
Stress N/mm2 : 94
Allowable N/mm2 : 177
Ratio : 0.53
Load combination : Max Range

Maximum occasional stress ratio

Point : A08
Stress N/mm2 : 107
Allowable N/mm2 : 252
Ratio : 0.42
Load combination : Hydrotest{1}

Maximum hoop stress ratio

Point : A14 F
Stress N/mm2 : 55
Allowable N/mm2 : 102
Ratio : 0.54
Load combination : Max P{1}

Maximum creep rupture stress ratio

Point : A08
Stress N/mm2 : 102
Allowable N/mm2 : 0 < See Note 1 >
Ratio : 0.00
Load combination : Sus.+T2{1}

* * * The system satisfies EN 13480 (2002) code requirements * * *
* * * for the selected options * * *

Warnings:
(1) Maximum creep rupture stress ratio is zero

* * * Note 1: Points were found in this stress category with * * *

Tab.4. 8 – Main steam line-A safety evaluation results at design conditions

Main SLA
Design case
Design Pressure: 100 bar
Design Temperature: 310°C

CODE COMPLIANCE COMBINATIONS

Combination	Category	Method	Case/Combination	Factor	M/S	K-Factor	(N/mm2)	D/A/P
GR + Max P{1}	Sustain	Sum	GR[1]	1.00			Automatic	Y Y Y
			Max Long	1.00				
Max Range	Expansion	Sum	Temp. Range	1.00			Automatic	Y Y Y
Amb to T1{1}	Expansion	Sum	T1[1]	1.00			Automatic	Y Y Y
Hydrotest{1}	Occasion	Sum	HY[1]	1.00		1.000	Automatic	Y Y Y
			Max Long	1.00				
Max P{1}	Hoop	Sum	Max Hoop	1.00			Automatic	Y Y Y
Sus.+T1{1}	Creep Rupt	Sum	Max Sus	1.00			Automatic	Y Y Y
			T1[1]	1.00				

R E S U L T S U M M A R Y

Maximum sustained stress ratio

Point : A08
Stress N/mm2 : 104
Allowable N/mm2 : 101
Ratio : 1.03
Load combination : GR + Max P{1}

Maximum displacement stress ratio

Point : A04 N
Stress N/mm2 : 352
Allowable N/mm2 : 238
Ratio : 1.48
Load combination : Max Range

Maximum occasional stress ratio

Point : A08
Stress N/mm2 : 75
Allowable N/mm2 : 252
Ratio : 0.30
Load combination : Hydrotest{1}

Maximum hoop stress ratio

Point : A03 F
Stress N/mm2 : 62
Allowable N/mm2 : 101
Ratio : 0.61
Load combination : Max P{1}

Maximum creep rupture stress ratio

Point : A03 F
Stress N/mm2 : 125
Allowable N/mm2 : 0 < See Note 1 >
Ratio : 0.00
Load combination : Sus.+T1{1}

* * * The system does not satisfy EN 13480 (2002) code requirements * * *
* * * for the selected options * * *

Warnings:
(1) Maximum creep rupture stress ratio is zero

* * * Note 1: Points were found in this stress category with * * *
* * * mechanical properties outside of temperature range. No * * *

Tab.4. 9 – Main steam line-B safety evaluation results at design conditions

Main SLB
Design case
Design Pressure: 100 bar
Design Temperature: 310°C

CODE COMPLIANCE COMBINATIONS

Combination	Category	Method	Case/Combination	Factor	M/S	K-Factor	(N/mm2)	D/A/P
GR + Max P{1}	Sustain	Sum	GR[1]	1.00			Automatic	Y Y Y
			Max Long	1.00				
Max Range	Expansion	Sum	Temp. Range	1.00			Automatic	Y Y Y
Amb to T1{1}	Expansion	Sum	T1[1]	1.00			Automatic	Y Y Y
Hydrotest{1}	Occasion	Sum	HY[1]	1.00		1.000	Automatic	Y Y Y
			Max Long	1.00				
Max P{1}	Hoop	Sum	Max Hoop	1.00			Automatic	Y Y Y
Sus.+T1{1}	Creep Rupt	Sum	Max Sus	1.00			Automatic	Y Y Y

R E S U L T S U M M A R Y

Maximum sustained stress ratio

Point		: A08
Stress	N/mm2	: 100
Allowable	N/mm2	: 101
Ratio		: 0.99
Load combination		: GR + Max P{1}

Maximum displacement stress ratio

Point		: A03 N
Stress	N/mm2	: 174
Allowable	N/mm2	: 176
Ratio		: 0.99
Load combination		: Max Range

Maximum occasional stress ratio

Point		: A08
Stress	N/mm2	: 111
Allowable	N/mm2	: 252
Ratio		: 0.44
Load combination		: Hydrotest{1}

Maximum hoop stress ratio

Point		: A03 N
Stress	N/mm2	: 62
Allowable	N/mm2	: 101
Ratio		: 0.61
Load combination		: Max P{1}

Maximum creep rupture stress ratio

Point		: A03 N
Stress	N/mm2	: 83
Allowable	N/mm2	: 0 < See Note 1 >
Ratio		: 0.00
Load combination		: Sus.+T1{1}

* * * The system satisfies EN 13480 (2002) code requirements * * *
* * * for the selected options * * *

Warnings:
(1) Maximum creep rupture stress ratio is zero

Tab.4. 10 – Main feedwater lines safety evaluation results at verified conditions

Main FWLA and B
Verified case
Design Pressure: 80 bar
Design Temperature: 295 °C

CODE COMPLIANCE COMBINATIONS

Combination	Category	Method	Case/Combination	Factor	M/S	K-Factor	(N/mm2)	D/A/P
GR + Max P{1}	Sustain	Sum	GR[1]	1.00			Automatic	Y Y Y
			Max Long	1.00				
Max Range	Expansion	Sum	Temp. Range	1.00			Automatic	Y Y Y
Amb to T1{1}	Expansion	Sum	T1[1]	1.00			Automatic	Y Y Y
Hydrotest{1}	Occasion	Sum	HY[1]	1.00		1.000	Automatic	Y Y Y
			Max Long	1.00				
Max P{1}	Hoop	Sum	Max Hoop	1.00			Automatic	Y Y Y
Sus.+T1{1}	Creep Rupt	Sum	Max Sus	1.00			Automatic	Y Y Y

R E S U L T S U M M A R Y

R E S U L T S U M M A R Y

Maximum sustained stress ratio

Point : C20
Stress N/mm2 : 47
Allowable N/mm2 : 104
Ratio : 0.45
Load combination : GR + Max P{1}

Maximum displacement stress ratio

Point : C00
Stress N/mm2 : 251
Allowable N/mm2 : 256
Ratio : 0.98
Load combination : Max Range

Maximum occasional stress ratio

Point : C20
Stress N/mm2 : 54
Allowable N/mm2 : 252
Ratio : 0.21
Load combination : Hydrotest{1}

Maximum hoop stress ratio

Point : C00
Stress N/mm2 : 39
Allowable N/mm2 : 104
Ratio : 0.38
Load combination : Max P{1}

Maximum creep rupture stress ratio

Point : C00
Stress N/mm2 : 109
Allowable N/mm2 : 0 < See Note 1 >
Ratio : 0.00
Load combination : Sus.+T1{1}

* * * The system satisfies EN 13480 (2002) code requirements * * *
* * * for the selected options * * *

Warnings:
(1) Maximum creep rupture stress ratio is zero

* * * Note 1: Points were found in this stress category with * * *
* * * mechanical properties outside of temperature range. No * * *

Tab.4. 11 – Main feedwater lines safety evaluation results at design conditions

Main FWLA and B
Design case
Design Pressure: 100 bar
Design Temperature: 310 °C

CODE COMPLIANCE COMBINATIONS

Combination	Category	Method	Case/Combination	Factor	M/S	K-Factor	(N/mm2)	D/A/P
GR + Max P{1}	Sustain	Sum	GR[1]	1.00			Automatic	Y Y Y
			Max Long	1.00				
Max Range	Expansion	Sum	Temp. Range	1.00			Automatic	Y Y Y
Amb to T1{1}	Expansion	Sum	T1[1]	1.00			Automatic	Y Y Y
Hydrotest{1}	Occasion	Sum	HY[1]	1.00		1.000	Automatic	Y Y Y
			Max Long	1.00				
Max P{1}	Hoop	Sum	Max Hoop	1.00			Automatic	Y Y Y
Sus.+T1{1}	Creep Rupt	Sum	Max Sus	1.00			Automatic	Y Y Y

R E S U L T S U M M A R Y

Maximum sustained stress ratio

Point : C20
Stress N/mm2 : 50
Allowable N/mm2 : 101
Ratio : 0.50
Load combination : GR + Max P{1}

Maximum displacement stress ratio

Point : C00
Stress N/mm2 : 249
Allowable N/mm2 : 247
Ratio : 1.01
Load combination : Max Range

Maximum occasional stress ratio

Point : C20
Stress N/mm2 : 59
Allowable N/mm2 : 252
Ratio : 0.24
Load combination : Hydrotest{1}

Maximum hoop stress ratio

Point : C00
Stress N/mm2 : 49
Allowable N/mm2 : 101
Ratio : 0.49
Load combination : Max P{1}

Maximum creep rupture stress ratio

Point : C00
Stress N/mm2 : 113
Allowable N/mm2 : 0 < See Note 1 >
Ratio : 0.00
Load combination : Sus.+T2{1}

* * * The system does not satisfy EN 13480 (2002) code requirements * * *
* * * for the selected options * * *

Warnings:
(1) Maximum creep rupture stress ratio is zero

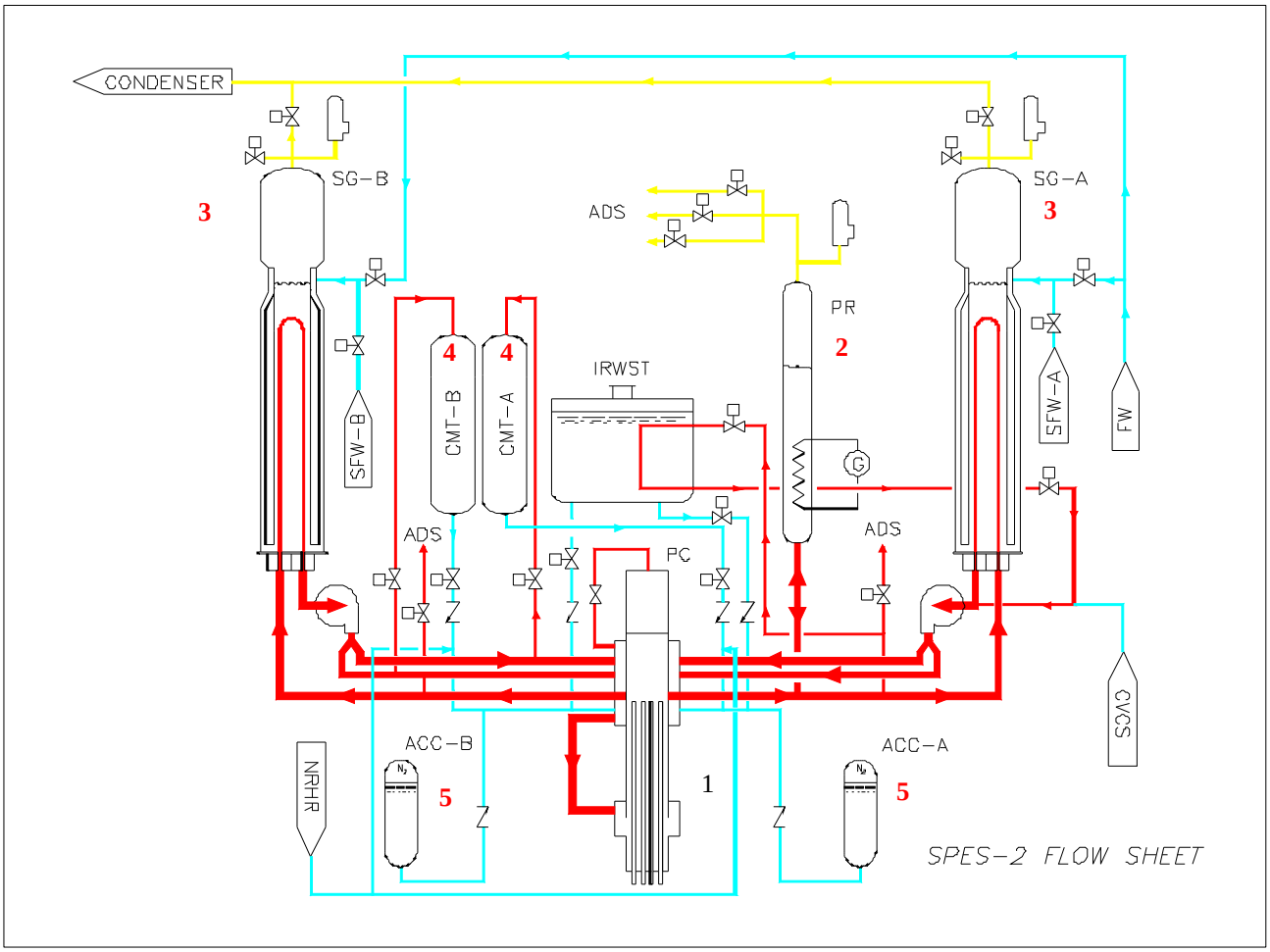

Fig.4. 1 – SPES-2 pressure tank numbering

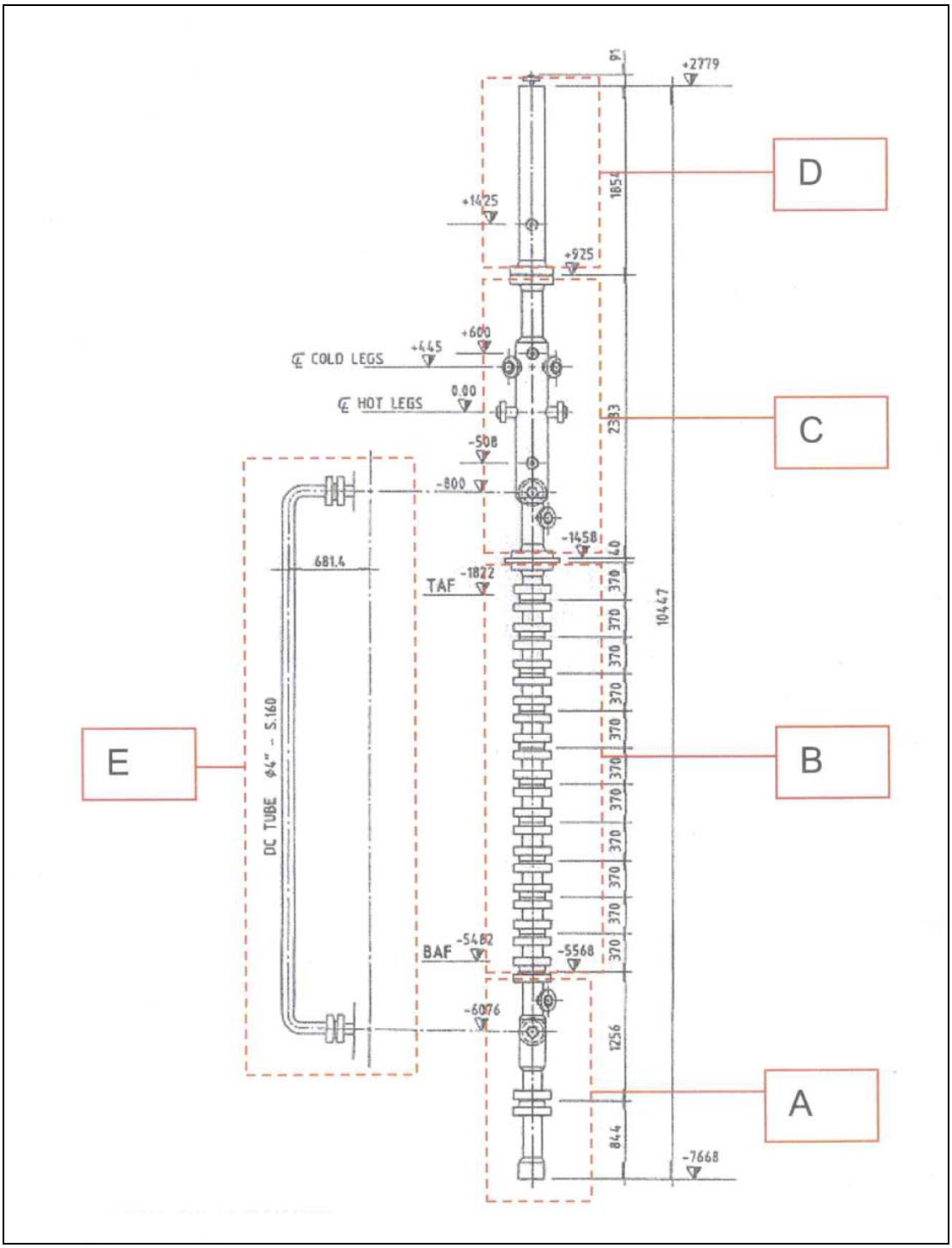

Fig.4. 2 – FEM analysis on SPES-2 power channel parts

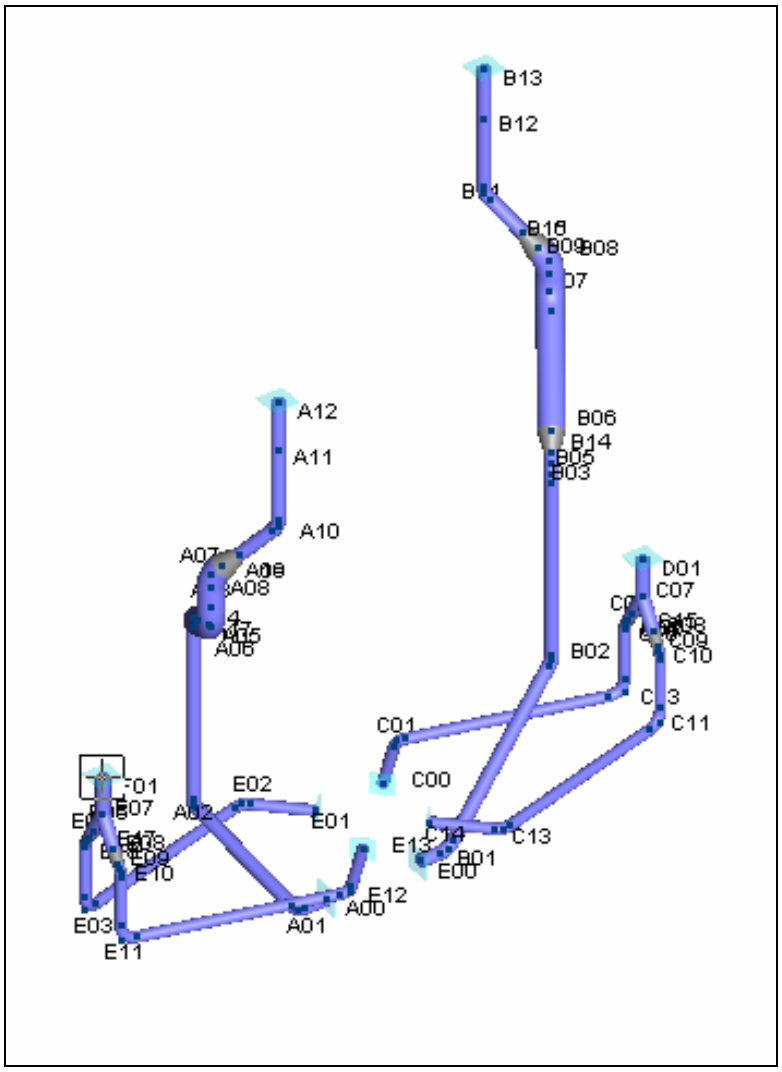

Fig.4. 3 – Hot legs and cold legs model for safety evaluation

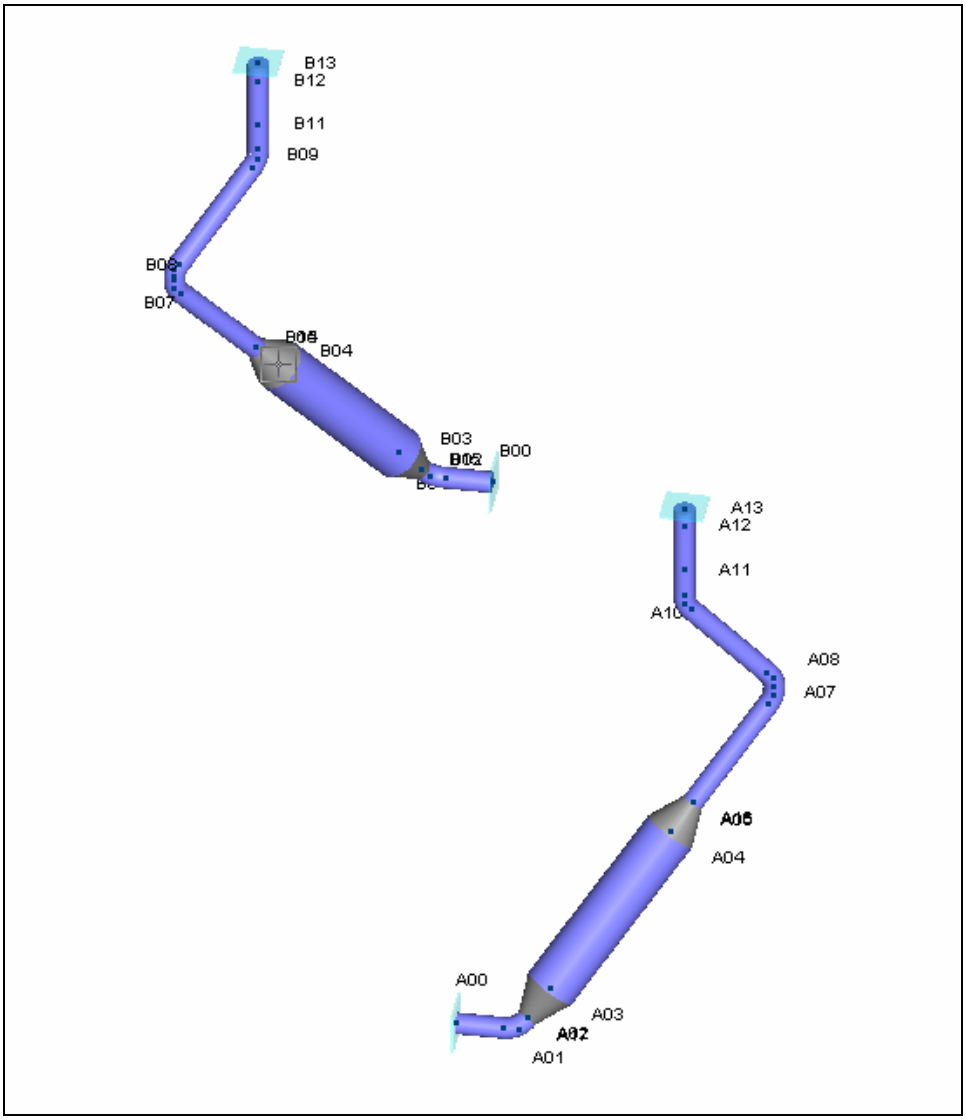

Fig.4. 4 – Pump suction pipes model for safety evaluation

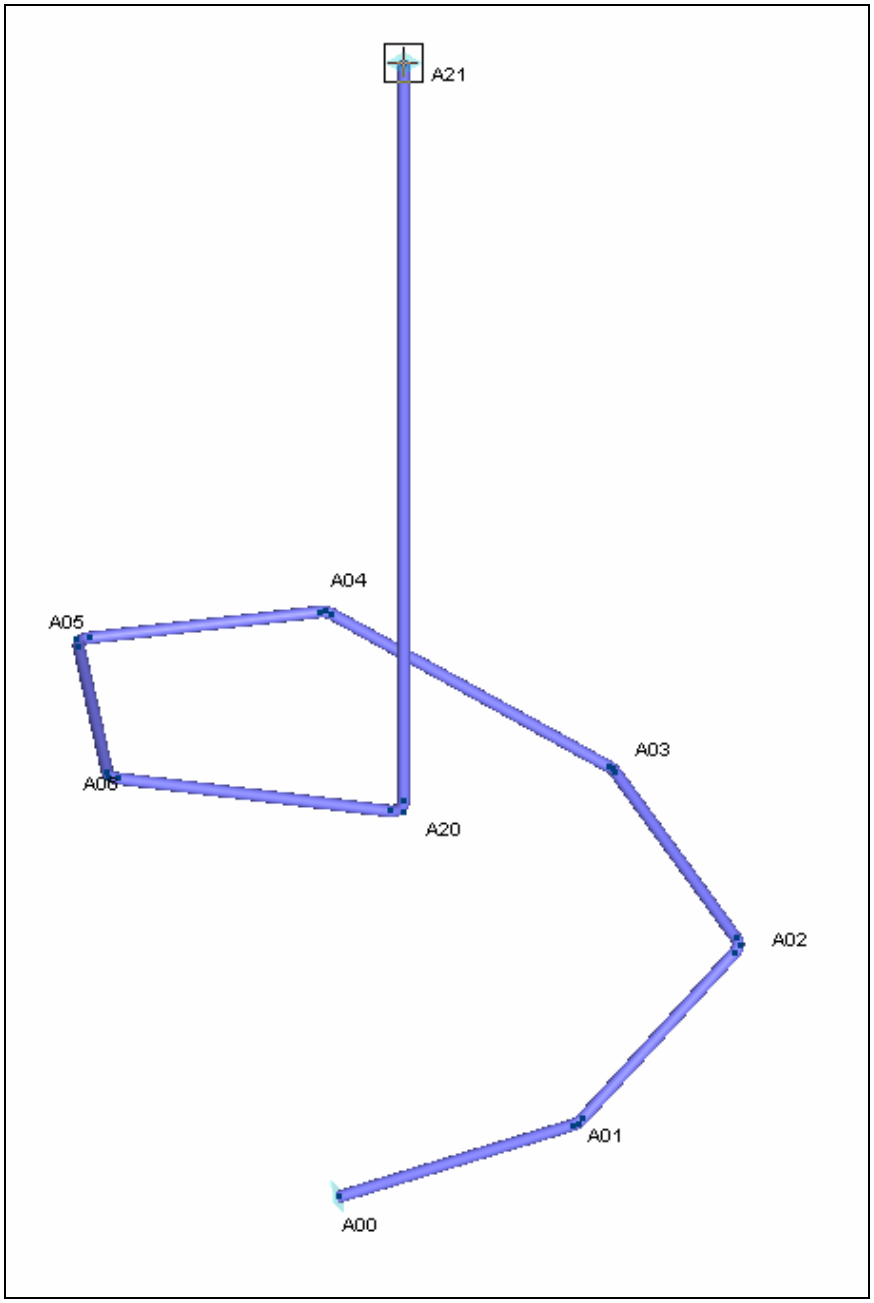

Fig.4. 5 – PRZ surge line model for safety evaluation

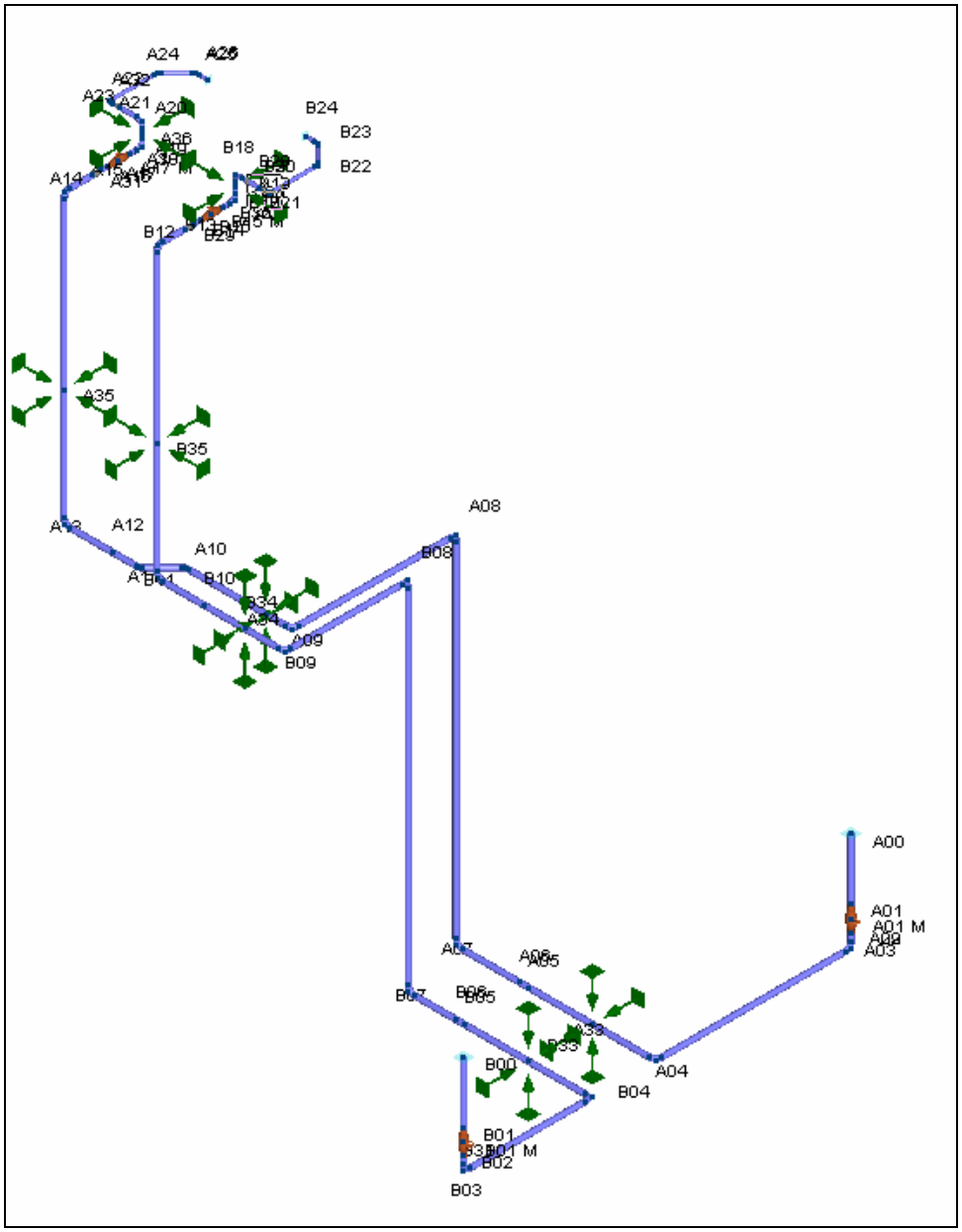

Fig.4. 6 – Accumulator injection lines and DVI lines model for safety evaluation

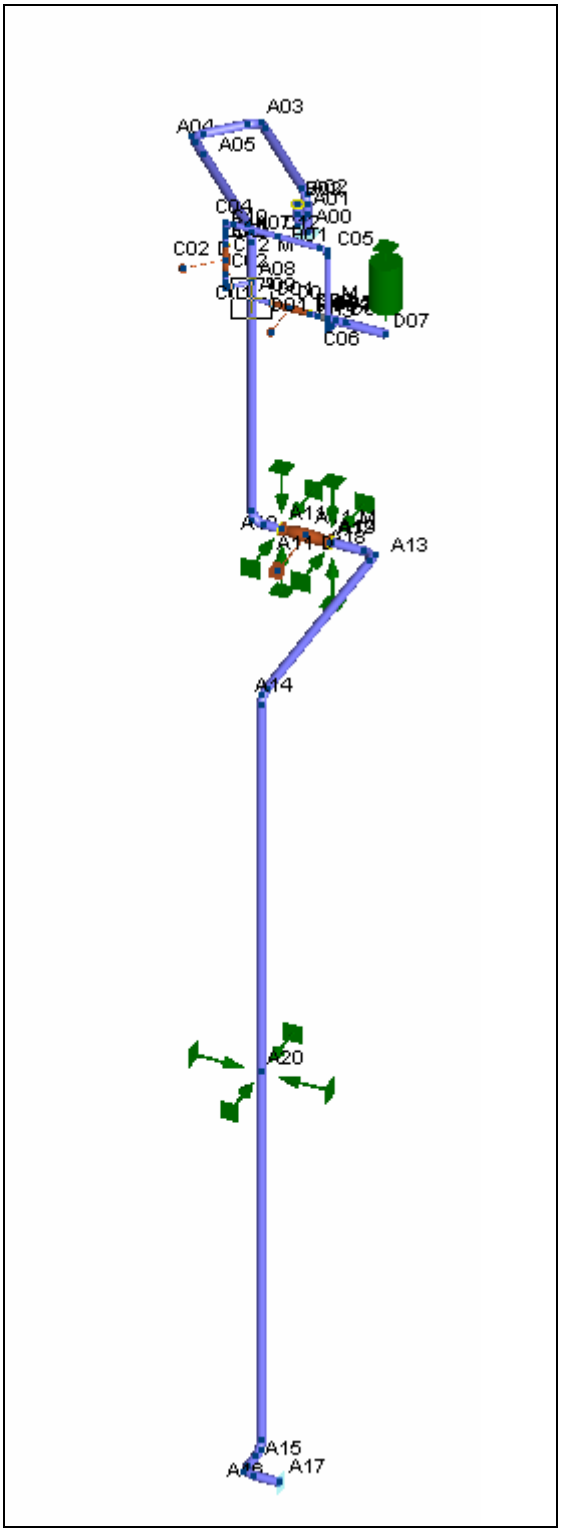

Fig.4. 7 – Steam line-A model for safety evaluation

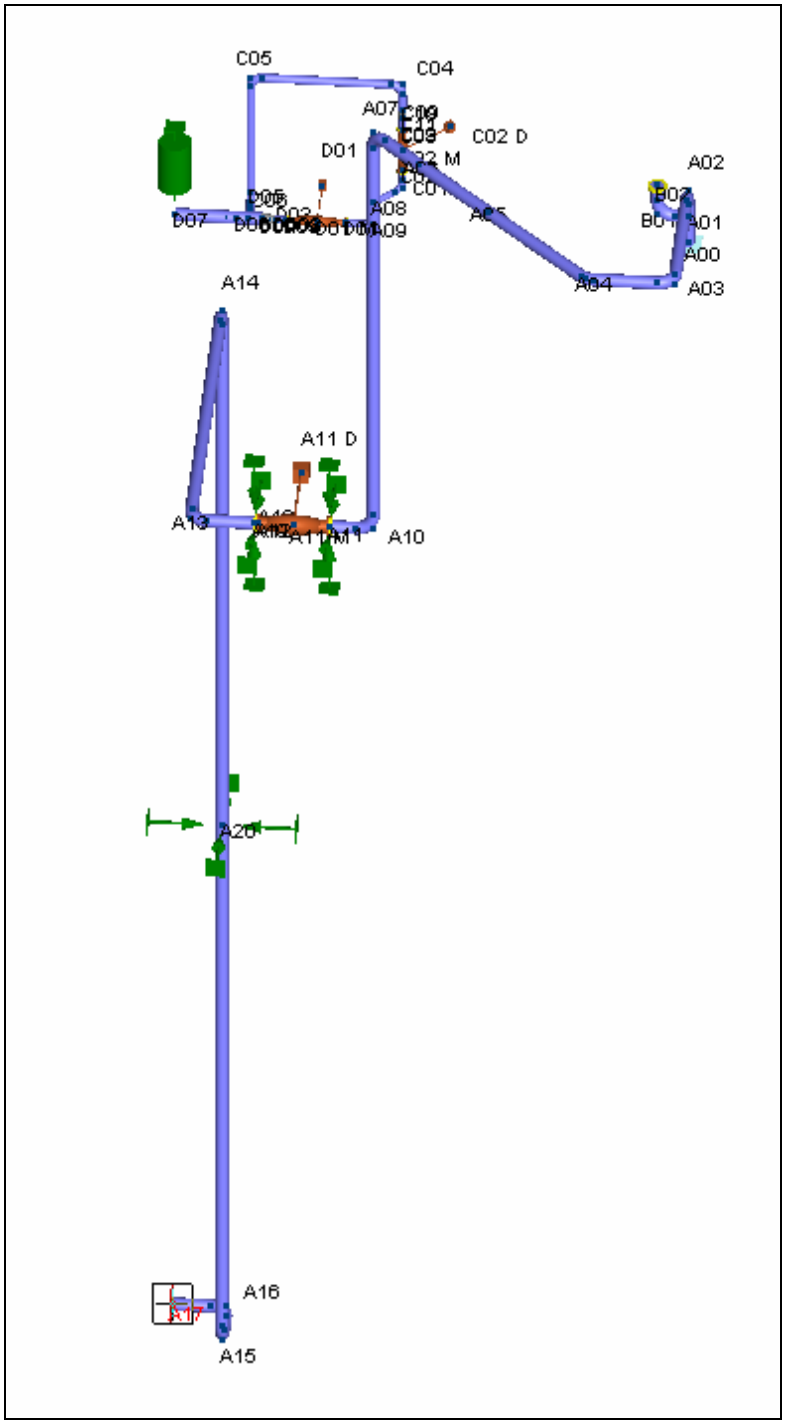

Fig.4. 8 – Steam line-B model for safety evaluation

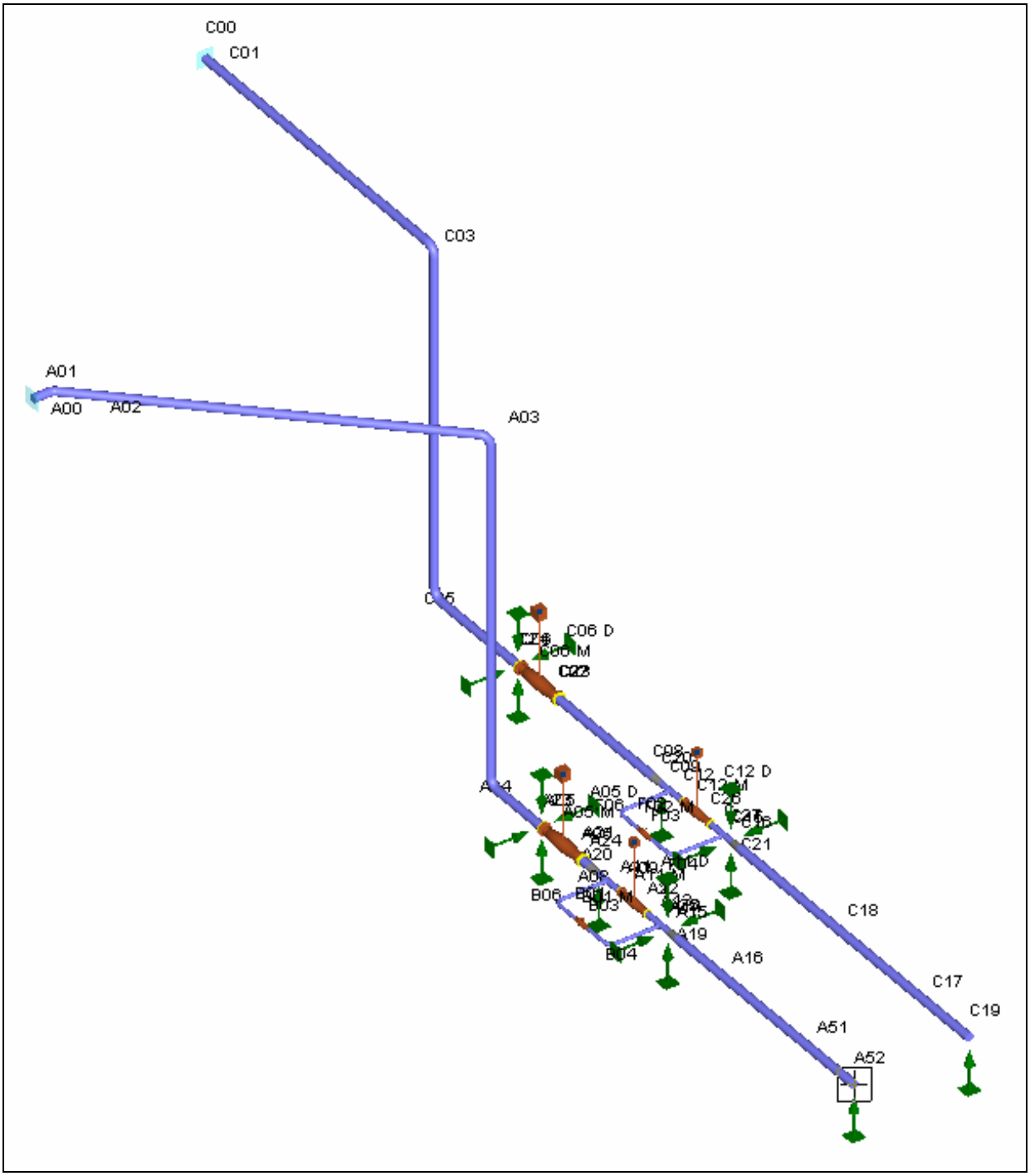

Fig.4. 9 – Feedwater lines model for safety evaluation

5 SPES-2 FACILITY SPECIAL MAINTENANCE ACTIVITIES

Other than the licensing aspects to operate the SPES-2 facility, as described in Chapter 4., special maintenance activities must be performed to restore the system after thirteen years inactivity.
The following paragraphs describe the steps needed to proceed with the activities.

5.1 Power channel

The main working phases to restore the SPES-2 power channel are reported below:

A) Disassembly of the power channel:
   a) electric connection dismantling at rod cluster top and bottom;
   b) rod bundle extraction;
   c) power channel bottom sealing system disassembly;
   d) shell disassembly at all flanged couplings and klingerit 400 gasket removal;
   e) shell elements inspection and non destructive tests;
   f) non destructive check on the upper power plate.

B) Disassembly of the rod bundle:
   g) heater rod check (visual inspection and mechanical measurements);
   h) existing cladding thermocouple removal;
   i) rod bundle spacer grid check.

C) Heater rod re-instrumentation and bundle re-assembly:
   j) new wall thermocouple installation on the rods at different levels in the core;
   k) rod leakage test for each rod to verify the rod integrity and the thermocouple welding;
   l) rod bundle re-assembly.

D) Shell re-assembly:
   m) general cleaning of power channel parts with particular care to sliding copper electric power connections at rod bundle bottom;
   n) shell re-assembly with new type gaskets (phlogopite mica) and new Belleville springs (coned disk springs) at the flanged couplings;
   o) bottom sealing system re-assembly with new graphite gaskets;
   p) shell installation on site;
   q) rod bundle insertion into the shell;
   r) Tubular downcomer expansion joint modification;
   s) electric connection restoring;
   t) upper plenum junction to shell;
   u) re-instrumentation.
   v) Installation of a new cooling system for the lower electrical connection.

Some of the works included in the above list present critical aspects. which have been analyzed in detail in the following.

5.1.1 Electric connection dismantling

The electric connections between the power bars and the upper power plate consist of fixing devices easily removable.
The rod bundle bottom electric connections, instead, require a series of operations for their dismantling:

- removal of the electric lower power bus;
- removal of the electric contact plates and grids cooling system: pipes and sprinklers;
- cleaning of the electric current distribution system;
- electric distribution system components labelling and dismantling, starting from the outermost;
- removal of the main distribution plate below the rod ends.

All the removed components will undergo integrity visual tests to check for surface cracks or corrosion. In case of damage, new components will be installed.
All the electric distribution system components will be stored in a safe and clean place.

5.1.2 Rod bundle extraction

The whole rod bundle should be extracted in its entirety from the power channel shell.
Once removed the top and bottom electric connections, the following phases are foreseen:

- removal of the power channel upper plenum to access the upper power plate and the rod bundle top;
- mapping the rod position with respect to the upper plate;
- unscrew each rod by acting on its square head;
- remove the bolts at the power channel bottom and extract the bundle from the shell using a proper support;
- move the bundle to the workshop;
- remove the bottom flange and the sealing system;
- extract the single rods from the grids.

The most critical step of this phase is to unscrew the rods from their case. Due to thermal transients undergone during the tests and the prolonged inactivity, the thread could be seized.

5.1.3 Shell disassembly at flanged coupling and klingerit 400 gasket removal

The power channel flanged coupling disassembly is needed for two reasons:

- substitution of the coned disk springs at the bolts, damaged in the years by very high tightness stress;
- substitution of the klingerit 400 gaskets, not allowed by the present Italian law, as containing asbestos fibres.

When dismantling, the presence of damaged or broken Belleville springs and their location will be recorded as auxiliary information for further evaluation on component stress.
The power channel disassembly and asbestos gasket removal will be performed by specialized workers after confining the area to avoid contamination, installing a high efficiency filtration system and operators protected by special suits, masks and gloves. The removal and the disposal of old gaskets and asbestos contaminated material will be done according to the Italian laws on asbestos contaminated materials.

5.1.4 Shell element inspection and non destructive tests

The integrity of the power channel shell elements will be verified by means of non destructive tests as dimensional, ultrasonic or penetrant liquid tests. Non destructive tests are needed as a complement to the FEM analysis, described in Chapter 4, to be presented to the Italian Ministry of Economic Development in order to have the license to operate the SPES-2 facility.
The upper power plate will be verified as well to check its integrity and avoid eventual ruptures during future tests.

5.1.5 Heater rod check and existing cladding thermocouple removal

It is necessary to remove the existing broken thermocouples from the inner side of the heater rods in order to allow inspection and detection of any coarse surface crack. Tecnomatic, a specialized company that worked on SPES-2 for the substitution of damaged rod thermocouples during SPES1 campaign , has been chosen to perform the operation.
The following phases are foreseen:

- extraction of each rod from the bundle;
- removal of the bottom tap (thermocouples cable outlet), Fig.5. 1;
- cut of the upper part of the rod in order to have an ‘open pipe’, Fig.5. 2;
- detection, from inside, of the thermocouple penetrations position on the rod wall;
- drilling, from outside, and cleaning of the penetration and thermocouple removal;
- surface cleaning and inspection.

The most important phase of this work is the surface inspection as, in case of cracks, special maintenance intervention will be required.

5.1.6 New wall thermocouple installation

After the heater rod check and existing thermocouple removal, twenty rods will be identified in the bundle for re-instrumentation. Possibly, rods never instrumented before will be chosen.

Up to a maximum of four thermocouples will be installed on the selected rods.
Tecnomatic company could perform the operation:

- insert the thermocouples, with their ceramic insulators, from the rod bottom side and place them in position with a customized tool managed from the rod upper side. Weld thermocouples once they are positioned;
- after welding, check each thermocouple to detect its electric continuity and electric isolation by the rod wall;
- check the thermocouple electric resistance and isolation from the rod wall;
- replace, by welding, the upper part of the rod to close the 'rod pipe', Fig.5. 3;
- perform for each rod a high pressure leakage test;
- repeat the re-instrumentation sequence in case of instrument damage, eventually on a different rod.

A critical phase of the process is the thermocouple welding; in fact, the device can be damaged or form a cold solder joint with the rod surface that may introduce a micro-fracture.
High pressure tests with nitrogen or helium can evidence the presence of micro-leakage from cold solder joint.

5.1.7 Rod leakage tests

The leakage test is necessary to check the hydraulic sealing of the rods with or without instrumentation, with particular attention to instrumented rod welding.
The test is performed by injecting Nitrogen (N_2) or Helium (He), from the rod bottom side (same exit of thermocouple cables). The rod is then pressurized.
A custom joint is used to assure sealing between the rod and the gas pipe.
A leak detector or a mass spectrometer, in case of Helium pressurization, is used to detect any possible crack or cold welding..
These operations must be conducted carefully to avoid damages on the thermocouple ends, when the instrumented rods are under test.
At the end of this phase, the bundle can be re-assembled.

5.1.8 Shell re-assembly with new type gaskets and new coned disk springs

The details of old gaskets used for fluid sealing at the power channel shell flanged coupling are shown in Fig.5. 4 and Fig.5. 5.
The search of a new gasket material was performed with the exclusion of new asbestos aramidic fibres, as their use is allowed up to 280 °C.
The CMD company, specialized in industrial gaskets, identified the phlogopite mica (mineral belonging to Phyllosilicate family) as proper material suitable to withstand the following conditions:

- Pressure: 200 bars
- Temperature: 350 °C.

A test section was set-up, at CMD company laboratory, to test 2-inch diameter gaskets at the specified conditions, with 250 Vac applied voltage, Fig.5. 6, Fig.5. 7 [8]. Helium 99% was used to pressurize a chamber between flanges including a gaskets with the following dimensions:

- Outside Diameter: 70 mm
- Inside Diameter: 52.5 mm
- Thickness: 3.-2 mm.

Leakage detection was performed with proper instruments: a mass spectrometer and a calibrated leak capillary.
The test results demonstrated the need of "contained" gaskets, i.e. included in a sided seat, for having no leakage and good electric insulation, after several hour testing.

The coned disk springs, at the bolts of any flanged coupling, Fig.3. 6, are commercial grade items and no problem should arise to purchase them in the market.

5.1.9 Tubular downcomer expansion joint modification

The SPES-2 tubular downcomer, Fig.3. 10, includes a steel bellow joint, coupled with springs, to compensate for the differential expansion between power channel shell and external pipe, Fig.5. 8.

The system consists in a bellow, providing a variable force proportional to pressure, and springs, providing a constant force.
During the SPES-2 test campaign, in several conditions with fast pressure variations, was verified that an unbalance between bellow and spring forces caused a flexion stress on the PC shell with temporary limited leakage from the flanged couplings.
A modification of the present bellow-spring configuration has been designed for future testing campaigns and the scheme is shown in Fig.5. 9.
The new configuration consists in the substitution of the springs by two bellows, each with an halved cross section area of the main bellow. All the bellows are connected to the primary loop: the main bellow directly on the downcomer pipe and the secondary bellows fed through pressure taps.
The force on the secondary bellows is proportional to pressure like force on the main bellow and no force unbalance occurs. In such a way, the bending forces due to thermal transients acting on the PC are fully compensated at any pressure by means of the above described device.

5.2 Steam generators

An integrity verification of the steam generators is needed, together with an appropriate plan of controls to be defined in agreement with ITALCERT, in order to inform INAIL before the system operation beginning.

5.3 Pressurizer

An integrity test and an appropriate plan of controls are necessary. The control plan should be defined in agreement with ITALCERT, in order to inform INAIL before the starting of system operations.

5.4 Accumulators

An integrity verification of the accumulators is needed, together with an appropriate plan of controls to be defined in agreement with ITALCERT, in order to inform INAIL before the starting of the system operations.

5.5 Primary and secondary loop piping

As for the pressurized tanks, an integrity verification of all piping is needed, together with an appropriate plan of controls, to be defined in agreement with ITALCERT, in order to inform INAIL before the system operation beginning.
A check of the piping continuity has been performed and the interventions needed to retrieve the paths where valves or other components was removed are listed below.

5.5.1 Hot legs and cold legs

No change is required.

5.5.2 Pump suction pipes

No change is required.

5.5.3 PRZ surge line

The pipe continuity of PRZ surge line needs to be restored due to the removal of a turbine flowmeter.

5.5.4 The DVI lines

No change is required.

5.5.5 The accumulator injection lines

No change is required.

5.5.6 The steam lines

In the main steam line-A, it is necessary to restore a break valve, a PORV valve, an isolation valve, an orifice (20.4 mm) and a connection line to the condenser.
In the main steam line-B, it is necessary to restore a PORV valve, an isolation valve and a connection line to the condenser.
In the main steam line header, it is necessary to extend the connection line to the main steam lines-A and B.

5.5.7 The feedwater lines

No change is required.

5.6 Primary coolant pumps and sealing system

At least the following maintenance works should be done for each pump:
- installation of new transmission belt between the pump and the motor shaft;
- verification of both the pump speed control system and the power supply system;
- verification of the DC electric motor brushes;
- analysis and possible replacement of the lubrication system oil;
- cleaning and partial painting of the sealing unit;
- cleaning or replacements of all the filters of both the lubrication and sealing systems;
- performance tests on both the lubrication and sealing systems.

5.7 Auxiliary systems

The main maintenance work foreseen on the auxiliary systems are well detailed in [9]. Part of such works has already been performed and the following paragraphs report those still to be done.

5.7.1 Feedwater pre-heating

Replacement of the existing asbestos thermal insulation in some restricted parts of the circuits by using asbestos-free materials has to be done.

5.7.2 Steam condensing and discharge system

Maintenance works on the existing chimney should be done, in particular a cleaning of the internal surface. As an alternative, the installation of a new smaller discharge line to vent part of the steam to the atmosphere should be considered.

5.7.3 Power supply systems

The main works on the SPES-2 power supply systems have already been done in the recent years under ENEA contract, in the framework of ENEA-MSE research program. These works concern mainly both the high and medium voltage systems (replacement of the 130/3 kV transformer, the 130 kV and 3kV switches and the 3000 V cable).
Other minor works to be done are:
- replacement of the 8 MW power group control centre;
- check, possible replacement and balance of the 8 and 4 MW power group diodes;
- oil treatment for the 4 MW power group;
- painting of some 4 MW power group parts;
- partial replacement of the low voltage power centre;
- replacement of some old cooling pumps switchboard;
- improvement of the lighting system.

5.7.4 Steam auxiliary system

The replacement of the gaskets and sealing packing should be considered for all the steam auxiliary system valves. In addition a complete check of the actuator, converters and positioners of the motor driven valves is requested.

5.7.5 Water auxiliary systems

The following works have to be considered for the auxiliary water system:
- supply of a new control system for the demineralised water tanks provided with level measurements and with additional solenoid-isolation valves;
- replacement of the present cooling water heat exchanger with a new one.

5.7.6 Air supply auxiliary system

A new low pressure air compressor with remote control and a new drying unit for the facility control valve operation should be provided.
The high pressure air compressor has to undergo a complete maintenance plan, including oil and filters replacement, and checks on both valves and transmission devices.

5.8 Other works

Further maintenance works are foreseen for the SPES-2 facility. They concern the piping and components thermal insulation, the facility valves, the load bearing structure.

5.8.1 Thermal insulation

The facility is thermally insulated by rock wool with aluminium cover. The aluminium cover has to be replaced in all the parts where it is broken or missing.

5.8.2 Valves

The replacement of the body gaskets and the sealing packing is foreseen by the manual valves.
The pneumatic control valves have to be checked with a complete maintenance plan including cleaning, lubrication, calibration of actuators, electro-pneumatic converters and positioners.

5.8.3 Load bearing structure

The load bearing structure has to be subjected to small mechanical works, such as installing some missing toeboards near transit lines and latches to prevent accidental displacement of the screenings. In addition local painting of rusted or blackened parts is foreseen.

5.9 Instrumentation

Since 1999 test, all instrumentation has been removed from the SPES-2 facility. A complete set of instruments needs to be re-installed.

5.10 Data acquisition and control system

The original SPES-2 DAS system, also used for the ’99 test, has been dismantled. A new data acquisition and control system needs to be installed.
In the last years, SIET has been using, for its facilities, National Instruments DASs with customized programs written with the NI Labview software. The SPES-2 facility should be provided with such a system including also proper boards for plant control via personal computers.

5.11 Control room

Intervention of special maintenance to the SPES-2 control room are needed:
- painting of walls, floor and roof restoring;
- control board restoring with installation of new regulators and devices for SPES-2 control.

Fig.5. 1 – SPES-2 heater rod lower termination

Fig.5. 2 – SPES-2 heater rod upper termination

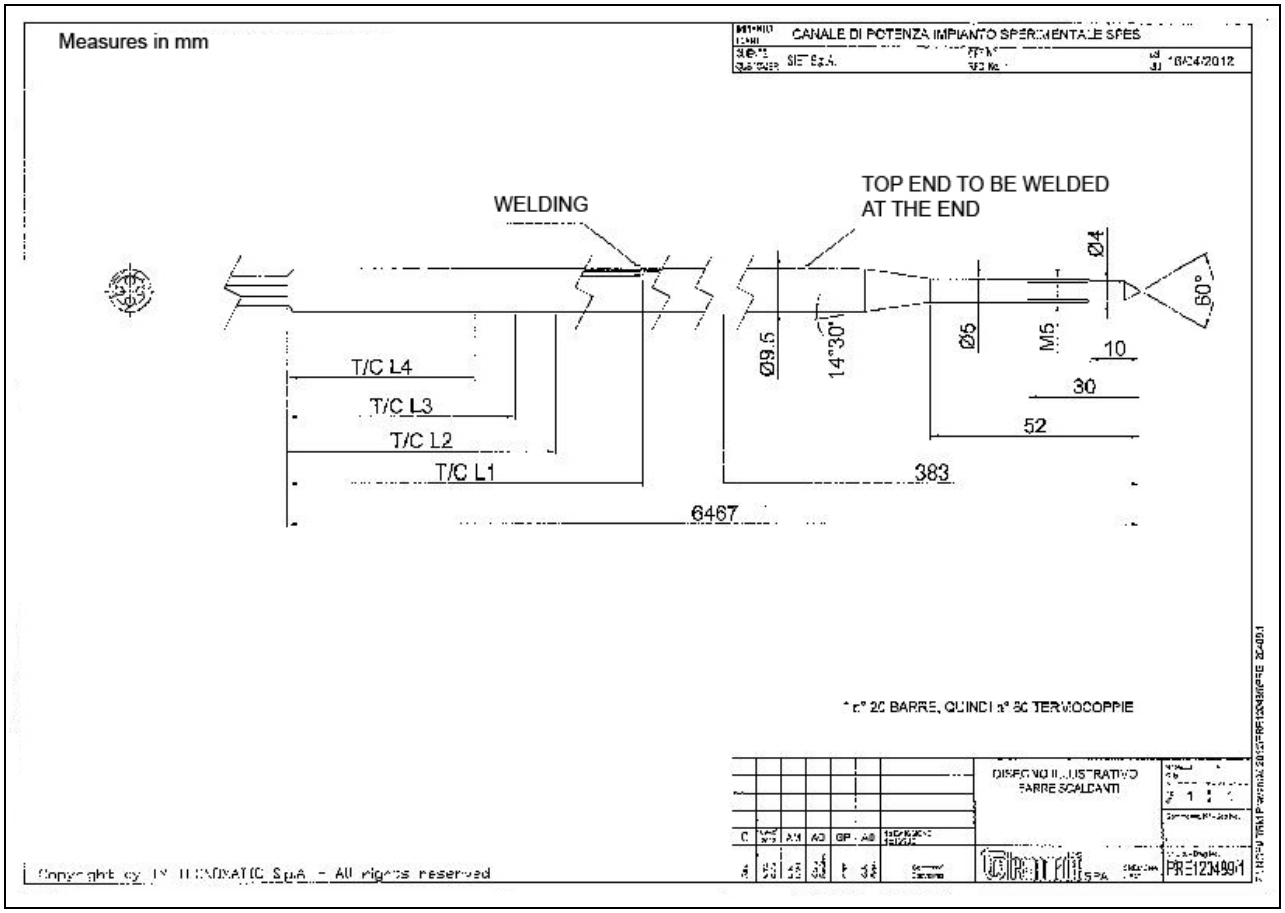

Fig.5. 3 – Heater rod re-instrumentation

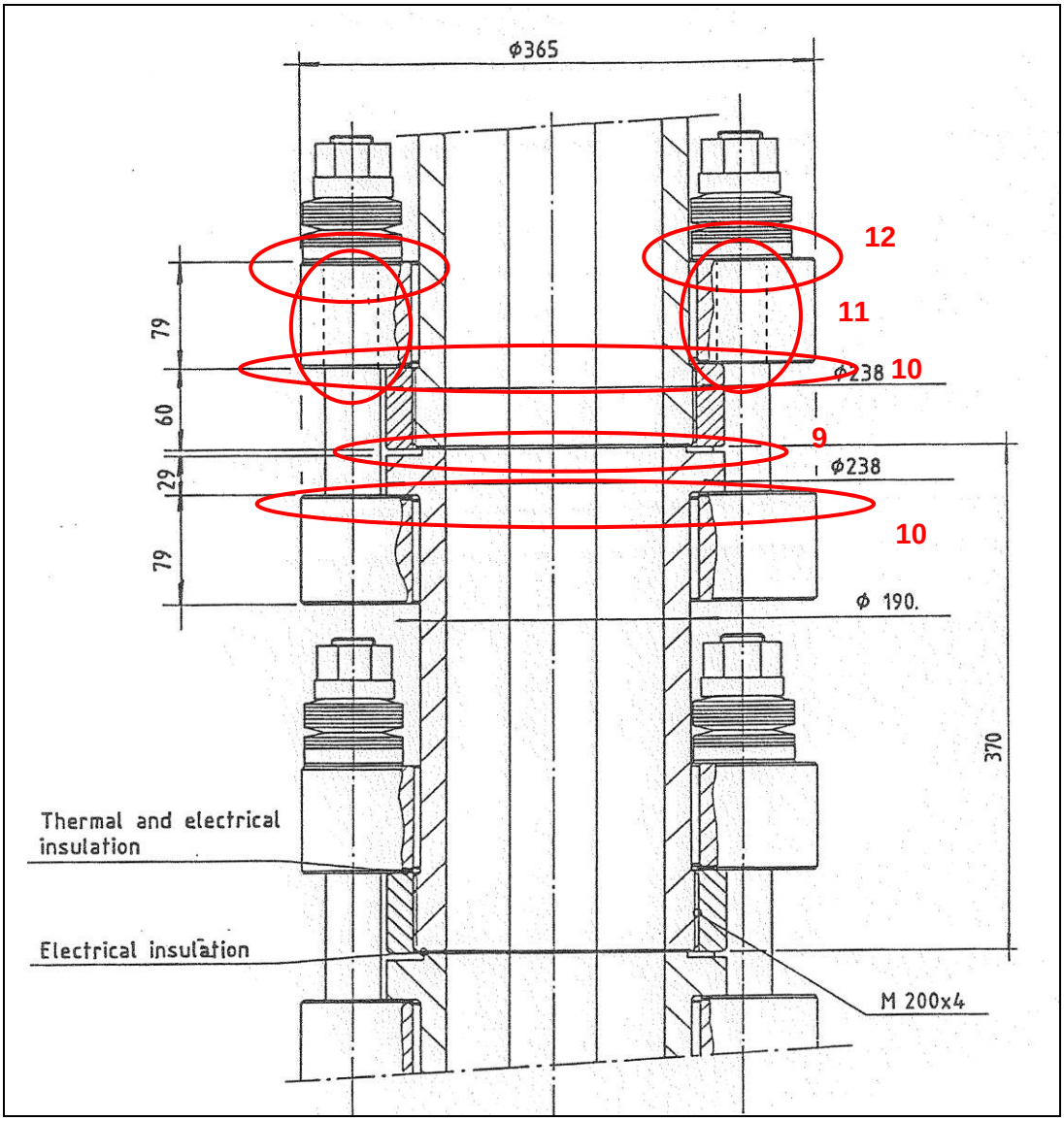

Fig.5. 4 – Gaskets position at the power channel flanged couplings

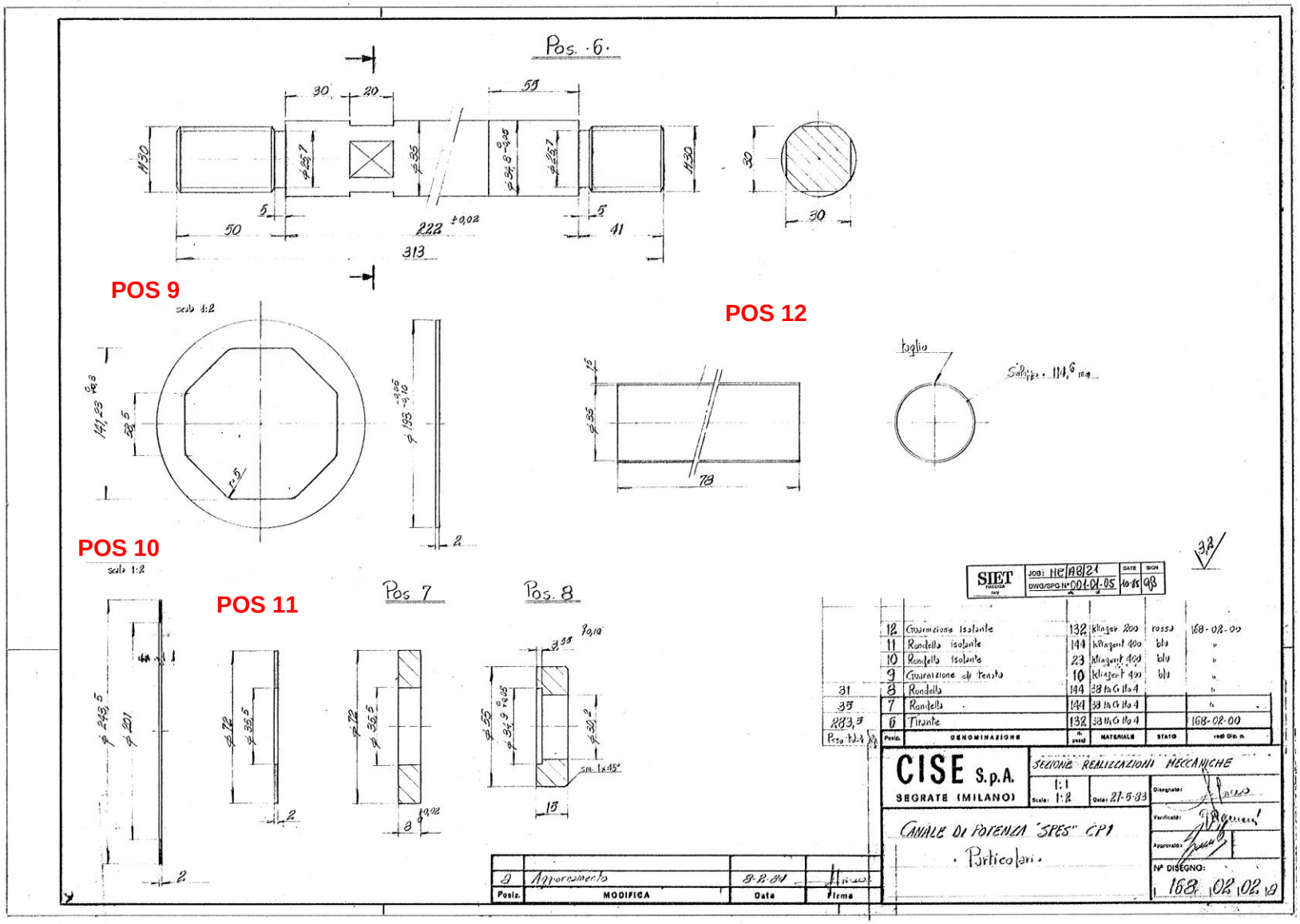

Fig.5. 5 – Gasket details a the power channel flanged couplings

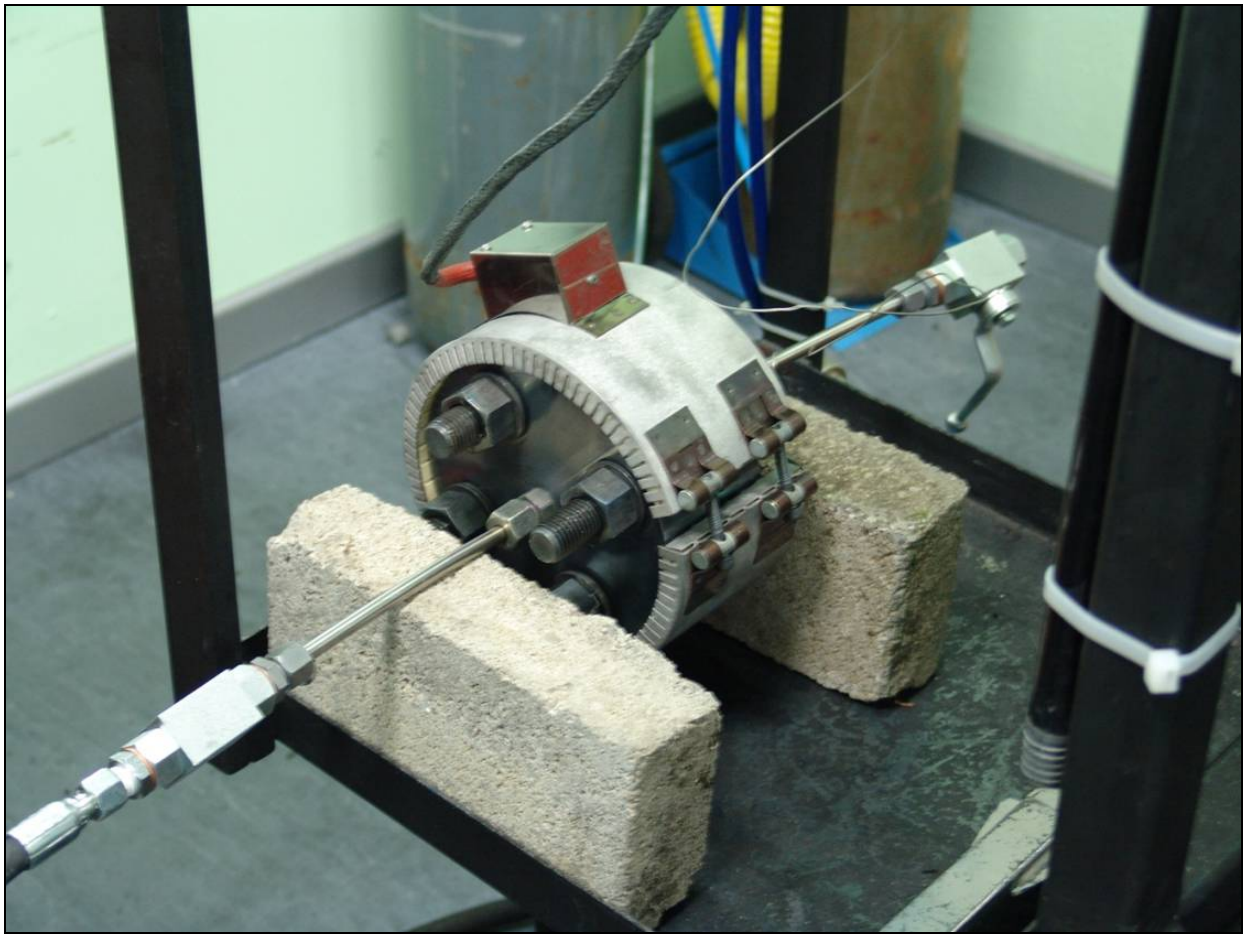

Fig.5. 6 – Phlogopite mica gasket test section assembly

Fig.5. 7 – Phlogopite mica gasket after testing

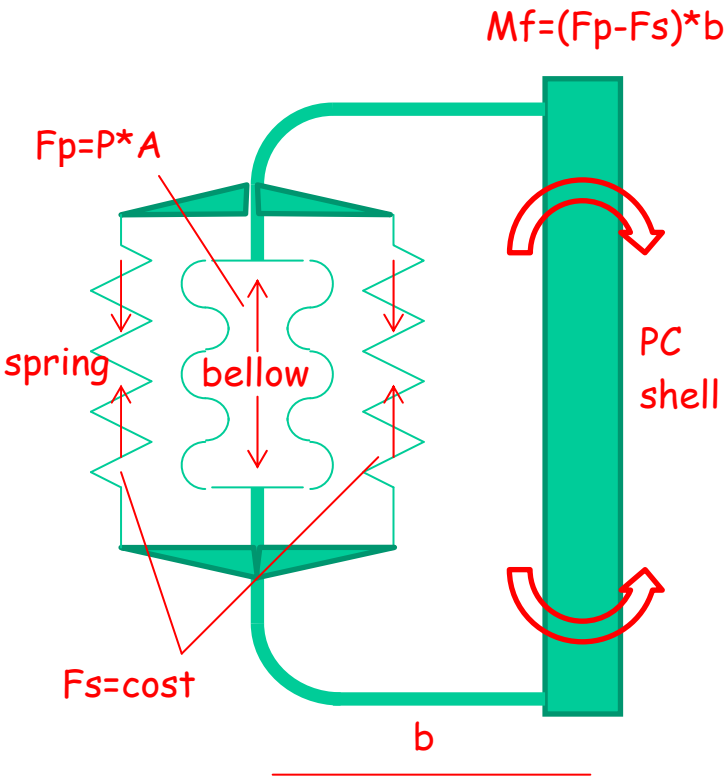

Fig.5. 8 – Tubular downcomer bellow joint operating scheme

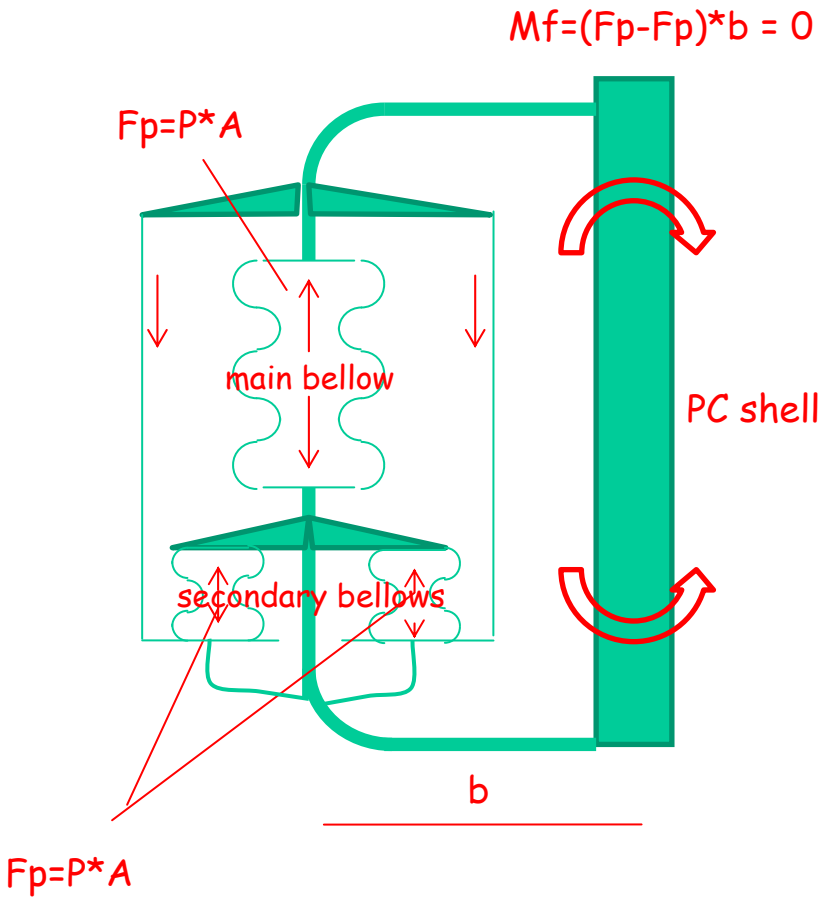

Fig.5. 9 – Tubular downcomer bellow joint operating scheme upgrade

6 SPES-2 FACILITY SET-UP FOR THE BORON DILUTION TEST

6.1 The boron dilution transient

The boron dilution is an event that takes place when conditions for reflux-condenser phenomenon are established in a nuclear power plant. The reflux-condenser effect occurs in steam generator U-tubes when natural circulation is broken-down due to the low primary coolant inventory, for example as a result of a SBLOCA. In this case, there is a formation of a free water level in the tubes. Steam rising from water have no-boron content, with the final result to have condensed water with low-boron concentration both at the SGs outlet and in the loop seals (located between the SGs and the primary pumps).

During the accidental event, Fig.6. 1, plugs of de-borated water can be dragged into the core, causing a dangerous positive reactivity insertion that may worsen the accident.

The goal of the test is to investigate the relationship between the primary coolant inventory (affecting the coolant circulation conditions) and boron concentration in the condensate at the outlet of the steam generators.

Because of the loop structure of the SPES-2 facility, which is not provided of loop seal, the de-borated water originated in the steam generators arrives in the downcomer of the power channel and there it is accumulated. In the numerical simulation of the test [3], the drainage junction is located in the lower plenum, so the accumulated de-borated water is moving downward inside the downcomer, following the evolution of the downcomer level.

The proposed experiment starts from single phase natural circulation conditions. During the test a progressive mass inventory reduction is performed. The primary side inventory decrease is obtained by a stepwise reduction of the primary coolant. In the last part of the transient, water is supplied when core uncovers and heat-up occurs.

The test is characterized by the occurrence of different coolant circulation conditions. It can be subdivided in main phases and sub-phases as listed in Tab.6. 1.

6.2 Test boundary and initial conditions

In the SPES-2 facility numerical simulation, rod power is imposed at 4% of nominal power and primary side pressure is set at 1.7 MPa. The secondary side pressure is assumed to be controlled by the operator to maintain the sub-cooled conditions in primary side. The value of the heat losses (calculated to be 1% of nominal power) is included in the selected rod power. A better evaluation of heat losses should be verified during the execution of the experimental test.

The selected conditions for the test execution are reported in Tab.6. 2.

6.3 Main modifications to SPES-2 facility for boron dilution transient simulation

The modifications to SPES-2 facility, needed for the execution of the boron dilution tests, mainly concern the drain and injection systems of borated water from the RPV bottom and the measurement system of boron concentration.

6.3.1 Borated water drain and injection systems

Two new systems shall be realized: one devoted to the water extraction, during the first phase of the test, and one devoted to the water injection, during the following re-filling phase. They shall be connected to the lower horizontal portion of the tubular downcomer by means of a TEE properly installed.

Both the systems operate in a discontinuous way with drainages and injection phases of about 5 s, followed by pauses of about 200 s.

During the drain phases, maximum 10 kg/s mass flows are foreseen, while during the injection phases, the maximum foreseen mass flow is 5 kg/s.

The Fig.6. 4 reports the SPES-99 flow diagram modified for the boron dilution test. The two systems are represented on the left side of the figure.

Drain system

The drain system line includes the following devices:

- measurement orifice F-X001

- pneumatic command actuation valve (ball type) BV-X001;
- manual valve (globe type) with plug shape for equi-percentage characteristics HV-X001;
- discharge line with sparger;
- catch tank (1.5 m^3 volume) to collect the discharged mass and weigh it by a load cell M-X001;
- homogenization and sampling system for boron concentration analyses A-X001.

At the beginning of the drainage transient, the catch tank shall contain at least 0.5 m^3 cold water to suppress eventual steam formation and to dump temperature of drained fluid. A sparger enhances mixing in the catch tank.
The globe valve HV-X001 shall be set partially open to have about 10 kg/s mass flow with the upstream pressure conditions.
The ball valve BV-X001 actuation, for short periods at regular time intervals, allows to discharge the specified mass. Discharged mass measure is performed both by weighing the discharged mass (M-X001) and by means of the orifice (F-X001) that provides the instantaneous measure.
Air injection into the catch tank, at the end of the test, allows to homogenize the liquid concentration before proceeding to sample collection by spilling.

Injection system
The injection system includes the following devices:
- injection tanks (SPES2 accumulators: 0.147 m3 volume, design pressure 11.5 MPa), Fig.3. 26;
- isolation valves HV-01A, HV-01B;
- measurement orifices O-XA1P, O-XB1P;
- manual valve (globe type) with plug shape for equi-percentage characteristics HV-01B-2, HV-01B-2;
- pneumatic command actuation valve (ball type) BV-X002;
- air charging lines and related valves HV-022, HV-023;
- water charging lines and related valves HV-024 HV-025;
- air homogenization lines and related valves HV-024-2 HV-025-2;
- homogenization and sampling system for boron concentration analyses S-X005-SX006.

The injection tanks shall be filled with water from TR-02 tank, through the CVCS pump.
They shall be charged with air at about 10 MPa pressure.
The balancing valves HV-01A-2 and HV-01B-2 shall be set to allow about 5 kg/s mass flow (2.5 kg/s each), driven by the differential pressure between injection tanks and primary circuit. It is fundamental the two valves are set at the same opening rate to have similar emptying velocities on the two tanks.

Pressure drop estimation for drain and injection piping sizing
The maximum drain and injection mass flow values, 10 kg/s and 5 kg/s respectively, require adequate diameter piping.
Estimation of the pressure drops provides the minimum diameter values for the lines:
- the drain line shall be a 2-inch diameter pipe up to the HV-X001 valve, that establishes the critical flow, and a 5-inch diameter pipe up to the sparger into the catch tank. Pressure drops estimated for the two portions are 0.12 MPa and 0.17 MPa, respectively.
- the injection line shall be a 1½-inch diameter pipe to allow up to 6 kg/s mass flow with 0.6 MPa pressure drop.

High concentration solution preparation system
This system is needed to prepare the high concentration solution. It shall include the following devices:
- a tank with a mixer;
- a volumetric variable flowrate pump.

Such a system shall inject the high concentration solution into the RT-02 tank, containing the plant charging water. The RT-02 tank shall be provided with a system for air injection to homogenize the mixture, before the circuit fill-up.

6.3.2 Concentration measurements
The plant shall be provided with spilling points for the online and offline boron concentration measurement. Other kinds of salts could be eventually used.
Spilling and sample collection system allows repeated measures of electric conductivity of the solution, which is a function of the boron or other compound concentration.

The same spilling system shall also provide collected samples to send to a chemical laboratory for off-line concentration measure.
The spilling points, foreseen on the primary circuit, are located as follows:

- S-X002 Downcomer;
- S-X003 Power channel lower part;
- S-X004 Power channel upper part;
- S-XA01 Steam generator-A inlet plenum;
- S-XA02 Steam generator-A outlet plenum;
- S-XB01 Steam generator-B inlet plenum;
- S-XB02 Steam generator-B outlet plenum.

Other spilling points are foreseen in other parts of the circuit:

- S-X000 in RT02 tank, where the water boron solution is prepared to fill the plant;
- S-X001 in the catch tank;
- S-X005 in the injection tank-A;
- S-X006 in the injection tank-B.

Spilling from points S-X000 and S-X001 will be performed manually, collecting water in sealed bottles and measuring the electric conductivity by portable instruments.
All the other points shall be equipped with a proper automatic sampling system.

Automatic sampling system description

The simplified scheme of sampling systems is reported in Fig.6. 4 (top left corner).
The sampling systems, devoted to spill water from the high pressure and temperature system, includes a heat exchanger coiled in a shell, fluxed with cooling water. The heat exchanger consists of a capillary AISI 316 tube, 3 or 4 mm diameter, about 500 mm long.
At the outlet of the capillary tube, an ON-OFF electro-valve is installed, actuated by the computerized control system. Downstream of the electro-valve, a micro-flow valve is installed, with needle plug to limit the mass flow.
The valve opening allows the sample collection that is cooled and sent to the measurement cell of an electronic conductivity meter.
Water discharged from the measurement cell is sent to a sampler consisting in a sleeve, electronically actuated, containing a series of test tubes. The sleeve shall be moved on DAS signals in order to link the testing time with the collected sample.
The sampling phase is started by opening the electro-valve. Initially, spilled water is fluxed without collection nor measures, to ensure cleaning of eventual residuals from previous samples. An estimate of the required non-collected flow volume is that it must be at least three times of the sampler circuit inner volume plus the conductivity meter cell volume.
The inner total volume of the sampling system shall be lower than 10 to 20 cm^3. This way, spilled liquid for each sample is around 30 to 60 cm^3.
To limit the total mass subtracted from the primary circuit, the sampled mass shall be a negligible fraction of total drained primary mass (~1%). Being around 300 kg the total mass drained from the circuit during the test, the total mass spilled for sampling should be less than 30 kg.
Seven samplers are foreseen, so each of them can extract up to 4 kg of water from the primary circuit. Such a mass is sufficient to produce about 50 to 60 samples, reasonable number to map the concentration along the whole experimental transient.

6.4 Considerations on possible electrolysis effects

Boron concentration measurements in SPES-2 can be performed by periodic water sampling from different zones of the loop. This method does not provide a continuous boron concentration detection, but it gives very good information on concentration values.
During the test, each sampling apparatus allows to drain a small amount of liquid from the primary loop (few cc) and to cool the sample through a small heat exchanger. The sample flows into an electrolytic cell for the boron concentration measurement and finally it is discharged into a test piece for off-line chemical analysis.
Due to the very low conductivity of the boric acid, 38 µS/cm in aqueous solutions of 3000 ppm of H_3BO_3, and considering the linear function of conductivity versus concentration, the boron concentration measurement through the electrolytic cells may be affected by non-negligible error.
The use of other compounds such as lithium hydroxide (LiOH) is under consideration, because it provide higher electric conductivity with lower concentration.

Electric conductivity of 150 μS/cm is considered in the following discussions, that can be obtained with LiOH concentration of about 10 to 30 ppm, easily measurable with the electrolytic cell.
Due to the SPES-2 power channel configuration, with direct electric heating of the rods, voltage is present between the rods and the outer flanged shell. In presence of conductive liquid with applied voltage, water electrolysis can occur. An estimation of the produced amount of gas is reported in the followings to verify if eventual gas formation affect the transient.

The considered conditions are: Power = 150 kW (3% of nominal power)
pressure = 1.7 MPa
Temperature = 473 K.

The equivalent electrical resistance of the SPES-2 rod-bundle is 2 mΩ, hence voltage of the power channel is:

$$V = \sqrt{P \cdot R} = 17.32\ V$$

Considering the rods active height of about 3700 mm, Fig.3. 4, and the presence of 10 flanges in the active zone, the average voltage (Vcell_avg) between the rod bundle external surface and the flow channel octagonal surface, Fig.3. 6, is 0.433 V. The Fig.6. 2 shows a scheme of power channel voltage versus height and the average value in a single cell.

An equivalent electrolytic cell, representing the power channel, can be drawn. Its scheme is reported in Fig.6. 3.

Current between the electrodes is:

$$i = V \cdot k \cdot \frac{S}{D_{avg}} = 2.15\ A$$

The current of 2.15 A corresponds to 7740 C/h, this means that:

$$\frac{q}{e \cdot N_A} = \frac{7740 \frac{C}{h}}{1.6e^{-19} C \cdot 6.023e^{23} mol^{-1}} = 0.08022 \frac{mol}{h}$$

i.e. the moles of gas produced per hour.
The gas volume at the considered conditions for test (17 bar, 473 K), through the gas perfect law, is:

$$V = \frac{n \cdot R \cdot T}{p} = 0.183 \frac{l}{h}$$

litres of gas induced by electrolysis per hour.

Therefore, neglecting possible recombination effects, during 10000 s foreseen for the test, the above estimation predicts a production lower than 1 litre of gas.
This amount of gas should not be an issue regarding possible formation of gas pockets that could cause a perturbation on the natural circulation.

No.	Phase	Sub-Phase	Notes
1	Conditioning Phase	Reaching of saturated conditions in the facility	The facility will be conditioned to reach the needed initial conditions for the test
2	Drainage	Single phase natural circulation	
3		Two phase natural circulation	Achievement of the max mass flow rate
4		Instability and siphon condensation	Affecting deboration
5		Reflux-condenser conditions	Affecting deboration
6	Core uncovered	Core dry-out and minimal mass occurrence	
7	Filling-up	Reflux-condenser conditions	Boron concentration increase
8		Instability and siphon condensation	Boron concentration increase
9		Two phase natural circulation	

Tab.6. 1 – SPES-2 boron dilution experiment: expected phenomenological sequence

No.	Parameter	Value	Notes
1	Primary side pressure	1.7 MPa	
2	Power	3% of NP (146.82kW) + ~1% to compensate heat losses	Nominal Power = 4.894 MW The selected rods power is 4%.
3	Secondary side pressure	1.5 MPa	
4	Pressurizer level	Nominal level	Pressurizer is electrically isolated before the beginning of the drainage phase
5	Steam generators level	Nominal level	
6	Feed water mass flow rate	To maintain the steam generator level	
7	Steam line mass flow rate	To maintain the steam generator level	
8	Initial boron concentration	2000 ppm	
9	Injection location	Lower plenum	
10	Drainage location	RPV connection @ core inlet height	
11	Injected water boron concentration	2000 ppm	
12	Injected water temperature	Tsat @ Patmospheric	Subcooled injection with respect to the primary water conditions

Tab.6. 2 – SPES2 experiment: boundary and initial conditions

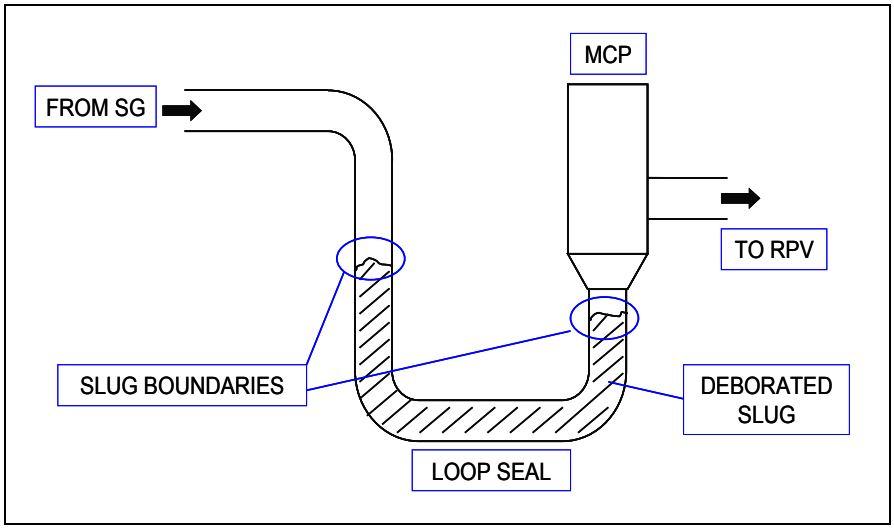

Fig.6. 1 - Scheme of de-borated water slug formation

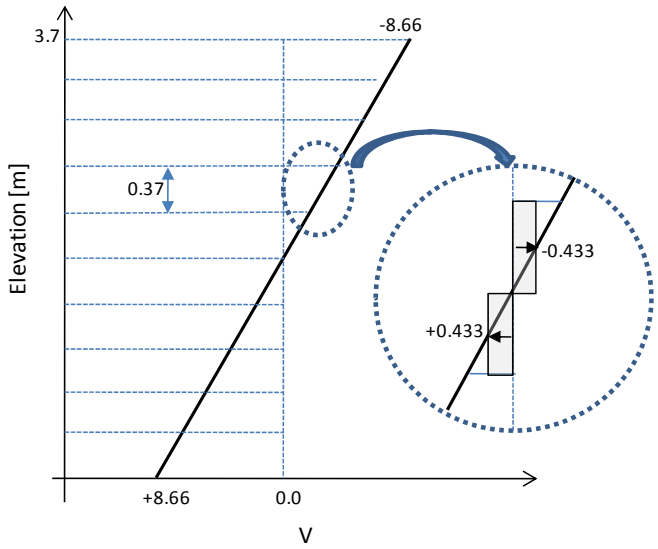

Vcell = 17.32 / 10 = 1.732 V

Vcell_avg = 1.732 / 4 = 0.433 V

Fig.6. 2 – Voltage along the power channel elevation

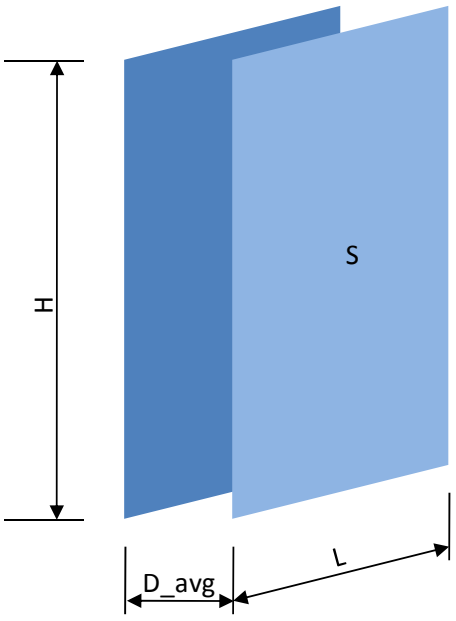

Dimensions in [mm]

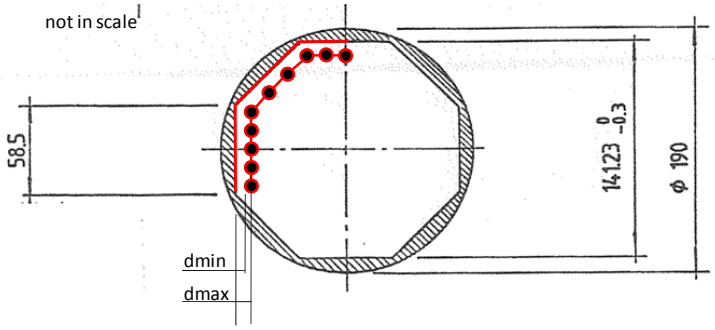

Voltage	V = 0.433 V
Width (octagon perimeter)	L = 46.8 cm
Height	H = 370 cm
Electrode Surface	S = 17316 cm2
Distance [(dmin-dmax)/2]	D_avg = 0.524 cm
Electrolyte conductivity	k = 150 µS/cm

Fig.6. 3 – Scheme of the power channel equivalent electrolytic cell

Fig.6. 4 – SPES-99 flow diagram modified for the boron dilution test

SIET drawing N. 025.05.01 SPES-99 P & ID for boron dilution test

INSTRUMENTATION LEGEND TABLE

MEASURED QUANTITY / FIRST LETTERS / SUCCEDING LETTERS (FUNCTION)		CONTROLLER	PRIMARY ELEMENT	INDICATOR	INDICATOR &CONTROLLER	RECORDER	TRANSMITTER	SPLIT RANGE CONVERTER		SWITCH
		C	E	I	IC	R	T	YA	YB	S
DIFFERENTIAL PRESSURE	DP				DPIC	DPR	DPT			
FLOW	F	FC			FIC	FR	FT			
LEVEL	L	LC			LIC	LR	LT	LYA	LYB	
PRESSURE	P	PC		PI	PIC	PR	PT			PS
SPEED OR ROTATION FREQUENCY	S				SIC	SR	ST			
TEMPERATURE	T	TC	TE			TR				TS
ELECTRICAL POTENTIAL	V	VC								
ELECTRICAL POWER	W	WC								
CONDUCTIVITY	C			CI						

(*) – n = Level number (n=11 ÷ 20)
m = Rod number

INDICE	DATA	MODIFICHE	DISEGNO	CONTROL.	APPROV.
9	08/08/12	updated loops for boron dilution test	Achilli	Ferri	Cattadori
8	18/07/12	Rev. 8	Ferri	Achilli	Cattadori
7	22/11/99	Rev. 7	Martini	Achilli	Cattadori
6	26/07/99	Rev. 6			
5	05/07/99	Rev. 5	AM		
4	27/04/99	Rev. 4	AM		
3	05/04/95	MODIFIED "AS BUILT"	ESP		
2	22/02/95	MODIFIED "AS BUILT"	ESP		
1	24/11/93				
0	30/11/92				

SIET
PIACENZA – Italy

DESCRIZIONE: SPES-99
P & ID for boron dilution test

SCALA: /
DISEGNO: N° 25.05.01
FOGLIO / DI / DERIVATO DA

25-05-01 – FORMATO A0

7 CONCLUSIONS

This document describes the SPES-2 facility in the SPES-99 configuration and lists the actions, special maintenance and modifications foreseen to make it usable for the execution of a boron dilution test.

Both administrative and physical issues need to be accomplished to re-start the facility and the solutions to satisfy all of them have been identified.

Accomplishment of the legislative requirements of the European directive on pressure vessels will take about one year time for the pressure vessel. A plan of non destructive control is need for all the other components and piping.

The power channel rod bundle re-instrumentation feasibility is verified as well as the substitution of the flanged coupling gaskets with new high pressure, high temperature resistant materials.

The other plant components do not show critical aspects for restart.

Specific modifications to the facility, needed for the execution of the boron dilution test, have been defined together with a concentration measurement sampling system.

Once performed all the actions described in this document, the SPES-2 facility can be restarted and the boron dilution test performed, counterpart of the OECD-PKL E2.2 executed on the AREVA NP PKL facility.

If the test will be performed, data of international interest for best-estimate code qualification will be recorded in the SPES-2 facility.

8 REFERENCES

[1] A. Kovtonyuk, M. Cherubini, M. Adorni, B. Bianucci, F. D'Auria: "Safety of evolutionary reactors: feasibility study for the experimental program of SPES facility". CIRTEN – University of PISA CERSE-UNIPI RL 1097/2011. Pisa, August 2011.

[2] C. Lombardo, M. Polidori: "Definizione di una prova sperimentale da effettuarsi sull'impianto SPES2 della SIET di Piacenza". ENEA NNFISS-LP2-047, September 8th 2011.

[3] W. Giannotti: "Pre-test calculation of the proposed experimental test F1.2 to be performed in SPES2 ITF". Studio associato di ingegneria BGS, September 6th, 2011.

[4] M. Rigamonti: "SPES-2 facility description" SIET 00 183 RI 93 Rev.1, Piacenza, June 12th 1995.

[5] R. Ferri: "SPES-99: 10-inch equivalent IB-LOCA in cold leg – Experimental data report". SIET 00 777 RP 09 Rev.0, Piacenza, November 26th 1999.

[6] G. Cattadori, M. Rigamonti: "SPES system description". SIET NT 032 86 Rev.0, Piacenza, December 17th 1986.

[7] Decreto Legislativo 25 febbraio 2000, n. 93: "Attuazione della direttiva 97/23/CE in materia di attrezzature a pressione". Gazzetta Ufficiale n. 91 del 18 aprile 2000 - Supplemento Ordinario n. 62.

[8] CMD Guarnizioni industriali: "Power channel "SPES"CP1 SIET (PC) – Italy". Test report . May 16th, 2012.

[9] G. Cattadori: "Specifica degli interventi sugli impianti sperimentali della SIET. SIET 01 602 ST10 Rev.0, Piacenza, June 6th 2010.