ENEA Ricerca Sistema Elettrico	Sigla di identificazione	Distrib.	Pag.	di
	XCIRTEN – LP3 - 012	L	1	31

Titolo

Preliminary evaluation of the Fluid-Structure Interaction effects in a LFR

Ente emittente CIRTEN

PAGINA DI GUARDIA

Descrittori

Tipologia del documento: **Rapporto Tecnico**

Collocazione contrattuale: Accordo di programma ENEA-MSE: tema di ricerca "Nuovo nucleare da fissione"

Argomenti trattati: Generation IV Reactors
Analisi di Sicurezza

Sommario

The aim of this study is to evaluate the structural effects (in terms of "global response") induced by a severe earthquake in a liquid metal reactor main safety relevant structures and components.
According to the international safety and design guidelines and to the stress tests requirements for the safety track the effects induced by a 'beyond design basis' earthquake (BDBE) event, like the one occurred at Fukushima, should be analyzed in order to evaluate or re-assess the nuclear power plant safety margin.
The proposed study is intended to preliminary analyze the structural effects of Liquid Metal cooled Fast Reactor types subjected to a BDBE by means of an appropriate dynamic FEM code. To the purposes, it was considered a lead cooled system (e.g. ELSY/ALFLRED projects) taking into account suitable hypotheses to characterize the dynamic behaviour of the lead fluid and of the reactor building and vessel structures.
A great attention was focused too on the arisen hydrodynamic forces and the coupling effects between fluid and structures (fluid-structure interaction and sloshing phenomenon) that may impair the resistance and/or operating capabilities of the reactor structures. The obtained preliminary results were analyzed with the intent also to check the facility general safety margins and to contribute to a step of the safety optimization of the mentioned systems

Note: PAR2011 LP3-D4.D

Autori:
G. Forasassi, R. Lo Frano (UNIPI)

Copia n. **In carico a:**

2			NOME			
			FIRMA			
1			NOME			
			FIRMA			
0	EMISSIONE	18/09/2012	NOME	NA	M. Tarantino	NA
			FIRMA			
REV.	DESCRIZIONE	DATA		CONVALIDA	VISTO	APPROVAZIONE

CIRTEN

Consorzio Interuniversitario per la Ricerca TEcnologica Nucleare

UNIVERSITA' DI PISA

DIMNP

Preliminary evaluation of the Fluid-Structure Interaction effects in a LFR

Authors

G. Forasassi

R. Lo Frano

CERSE-UNIPI RL 1518/2012

PISA, August 2012

Lavoro svolto in esecuzione dell'Attività LP3.D4 - AdP MSE-ENEA Ricerca di Sistema Elettrico - Piano Annuale di Realizzazione 2011, Progetto 1.3.1 "Nuovo Nucleare da Fissione: collaborazioni internazionali e sviluppo competenze in materia nucleare"

Content

List of Figures

Summary

The aim of this study is to evaluate the structural effects (in terms of "global response") induced by a severe earthquake in a liquid metal reactor main safety relevant structures and components.
According to the international safety and design guidelines and to the stress tests requirements for the safety track the effects induced by a 'beyond design basis' earthquake (BDBE) event, like the one occurred at Fukushima, should be analyzed in order to evaluate or re-assess the nuclear power plant safety margin.
The proposed study is intended to preliminary analyze the structural effects of Liquid Metal cooled Fast Reactor types subjected to a BDBE by means of an appropriate dynamic FEM code. To the purposes, it was considered a lead cooled system (e.g. ELSY/ALFLRED projects) taking into account suitable hypotheses to characterize the dynamic behaviour of the lead fluid and of the reactor building and vessel structures.
A great attention was focused too on the arisen hydrodynamic forces and the coupling effects between fluid and structures (fluid-structure interaction and sloshing phenomenon) that may impair the resistance and/or operating capabilities of the reactor structures.
The obtained preliminary results were analyzed with the intent also to check the facility general safety margins and to contribute to a step of the safety optimization of the mentioned systems.

1. Introduction

The dramatic consequence of the 9 magnitude (M) Fukushima earthquake highlighted and confirmed that the existing and the future nuclear installations should be designed to be highly secure and capable to withstand a wide range of internal and external extreme loads, such as earthquakes, tsunamis, hurricanes, flooding, etc.

Furthermore as the recent Fukushima accident showed (Figure 1), exceptional extreme events are not impossible, even if very unlikely, and can seriously impair the safety of the nuclear facilities, if not correctly taken into account in the design phase.

Figure 1 - Fukushima earthquake induced effects

Taking into account the preliminary lessons learned from the Fukushima Dai-ichi NPP 2011 accident, a comprehensive safety and risk assessment must be performed on all nuclear plants/facility (that is the aim of the stress tests) along two parallel tracks: a safety track to assess how nuclear installations can withstand the consequences of various extreme external events and a security track to analyse security threats and incidents due to malevolent or terrorist acts [1].

International regulatory bodies suggest and require the development of systematic approaches (deterministic or probabilistic ones) for identifying and assessing the hazards associated with an external event, such as e.g. the earthquake (the most important natural external events).

In the proposed study the dynamic effects induced by the propagation of the seismic waves (primary and/or secondary waves along the N-S, E-W and U-D directions) in a liquid metal reactor (LMR) with reference to a lead reactor (ELSY or ALFRED) have been analyzed by means of a neo-deterministic approach.

Apart from the possible structural effects induced by a seismic event in a NPP containment structure, the importance to analyze the seismic behaviour of a LFR reactor is related to the fluid-structure interaction: this interaction may determine a free surface motion of liquid contained in it (sloshing phenomenon).

In fact the sloshing effects induced by external forces may have serious consequences also in conventional engineering applications, e.g. in the ballast tanks of a ship it may cause rolling moments or in the LNG tank it may generate overturning moment and eventually the Elephant's foot buckling (Fig. 2).

Figure 2 - Elephant's foot buckling deformation

Therefore considering the possible dynamic and pressure loads, which may arise from the fluid-structure interaction, during an earthquake, and be severe enough to cause structural damage and to impair the integrity of reactor structures, it is of meaningful importance to investigate the influence of the fluid-structure interaction (FSI) itself and of the related sloshing phenomenon in

a LFR since its design stage. The sloshing phenomenon is hence felt of meaningful importance in LFR plants due to the high density and quantity of the primary coolant.

In this framework it is important to note that, in the works available in the free literature, the problems of dynamic interaction of liquid sloshing with elastic or rigid structures [2-3-4-5] are generally solved applying approximate linear theories.

In the proposed study, a preliminary seismic analysis aiming at the evaluation of the safety margin of a LFR taking into account the mentioned FSI and sloshing phenomenon, in the event of a beyond safe shutdown earthquake, was carried out with reference to ELSY/ALFRED reactor.

It was evaluated if ELSY or ALFRED reactor should be able to bear the inertia forces generated in the structure itself, besides the dynamic liquid loads.

In fact the seismic inertia mass of the reactor coolant might significantly increase during the seismic motion and result in a severe hydrodynamic pressure acting on the reactor vessel and its internals walls causing the dynamic buckling of the RV or of the internals, the over stressing of the roof, in the case of lead wave impact, etc.

Because of the complex geometry of the considered reactor vessel (as described in the following section 3) linear theories are not capable to predict the dynamic behaviour of such a type of structure, therefore to adequately represent the mentioned phenomena a numerical treatment (with FEM code) with suitable contact algorithms associate to the interface boundary conditions was used.

2. Description of the Fluid-Structure Interaction

Fluid-structure interaction problems have attracted a great deal of attention because of their wide range of applicability. Numerous physical phenomena provide examples of this interaction type, in particular in the event of earthquake.

The safety of liquid retaining structures subjected to a seismic loading is of great importance in regard to the hydrodynamic forces caused by sloshing and impulsive liquid motion determined by the fill levels containers oscillatory phenomenon.

The motion of the liquid free surface, caused by any type of external forces, contained inside a partially filled vessel or tank is named, in literature, sloshing.

Depending on the type of external excitation and on the shape of the container, the free liquid surface could be characterized by different types of motion including simple planar, non planar, rotational, ect. (Fig. 3). Moreover the wave amplitude will depend on the dynamic modal behaviour, type and geometry of the tank, on the filling depth of the liquid and its main properties.

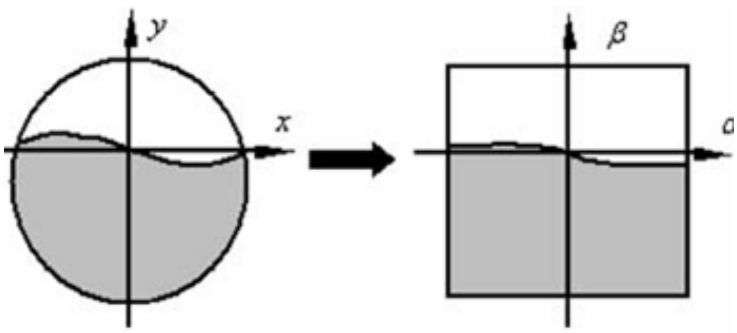

Figure 3 – Motion of liquid in a partially filled container

The basic problem of fluid-structure interaction involves the evaluation of the hydrodynamic pressure distribution, forces, moments and natural frequencies of the free-liquid surface. These parameters have a direct effect on the dynamic stability and performance of moving containers.

Generally, the hydrodynamic pressure of liquids in moving rigid containers has two distinct components:

1. the first component is directly proportional to the acceleration of the tank and is caused by the part of the fluid moving with the same tank velocity;
2. the second one is known as ‘‘convective’’ pressure and represents the free-surface-liquid motion.

As indicated in the ASME rules [6], liquid’s motion inside its container has an infinite number of natural frequencies, but only the lowest few modes are the most important due to the coupling phenomena between input dynamic motion and partially filled structure.

2.1 Analytical Theories

The fundamental theory of liquid surface waves is documented in several references (see, e.g., Lamb, 1945, Stoker, 1957, Brodkey, 1967 and Barber and Ghey, 1969, Faltinsen 2000, etc.).
Analytical solutions are limited to regular geometric tank shapes such as cylindrical, and rectangular with either vertical or horizontal excitation.
However, analytical solutions for predicting large-amplitude sloshing are not yet fully developed as well as the effects of local peak impact pressure on structural components.
Sloshing phenomena in moving rectangular tanks can usually be described by considering only two-dimensional fluid flow if the tank width is much smaller than its breadth [3-4-5]. Tanks with two-dimensional flow are divided into two classes: low and high liquid fill depths. The low fill depth case is characterized by the formation of hydraulic jumps and travelling waves for excitation periods around resonance [7], while the high fill depths by large standing waves, usually formed in the resonance frequency range.
In the analytical approach the fluid behaviour is analyzed assuming the fluid as incompressible and Newtonian characterized at time t by a deformable domain Ω^0. The motion effects determines an evolution of the domain Ω^t, that is not known a priori, but can be determined through the study of the interaction between the fluid and the structure (Fig. 4).
The problem of determining the new profile Γ^t (representing the liquid free surface motion), from a mathematical point of view, is extremely complex and involves determining the speed and the pressure of the fluid, the displacement of the structure and the position of points in the domain Ω^t at each instant t.

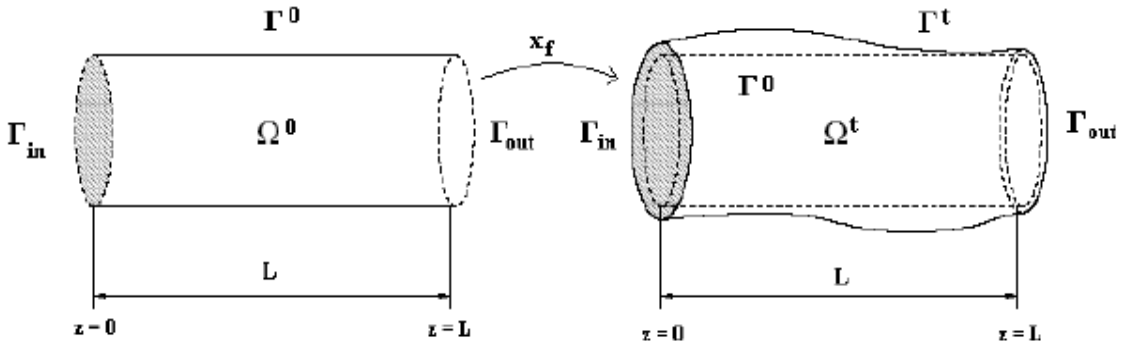

Figure 4 – FSI representation

The widely used analytical approach applied to solve the FSI assumes the tank, subjected to seismic motion, as rigid and applies the classical equations governing the free motion of the fluid in terms of potential theory (potential flow theory with approximate asymptotic or modal solution).

The fluid inside the vessel is considered as incompressible, not viscous and irrotational [9]. The horizontal acceleration component, A_x is usually a function of time.

Therefore for a generic section (Fig. 5) the fluid potential may be expressed as:

$$u = \nabla \Phi \tag{1}$$

Assumed that the local velocity potential is Φ(x, y, z, t) in a Cartesian coordinate system (x, y, z), the fluid motion governing equations based on the potential theory are as:

$$\nabla^2 \Phi = 0 \tag{2}$$

where Φ = Φ (x, y, z, t) is the velocity potential in the above Laplace equation. The kinematic boundary conditions are pure-slip on the free surface as:

$$\frac{\partial \xi}{\partial t} = \frac{\partial \varphi}{\partial y} - \frac{\partial \varphi}{\partial x}\frac{\partial \xi}{\partial x} - \frac{\partial \varphi}{\partial z}\frac{\partial \xi}{\partial z} \tag{3}$$

where ξ = y is the free surface elevation above the still liquid level. The dynamic boundary condition on the free surface is:

$$\frac{\partial \varphi}{\partial t} = -\frac{1}{2}\left[\left(\frac{\partial \varphi}{\partial x}\right)^2 + \left(\frac{\partial \varphi}{\partial y}\right)^2 + \left(\frac{\partial \varphi}{\partial z}\right)^2\right] - g\xi - A_x x - A_z z \tag{4}$$

In the above equations, g is the acceleration of gravity, t is the time. The initial values of velocity potential and free surface height are set to zero, which corresponds to still liquid beginning condition.

The evolution of the profile of the free surface is described by a shape function, mathematically described in terms of Fourier series with time-dependent coefficients, like the follows:

$$z = f(x, y, t) = \sum_{1}^{\infty} \beta_i(t) f_i(x, y) \tag{5}$$

The f_i (x,y) is the Fourier expression that describes the average behaviour of the free surface and that satisfies the conservation of volume. In the hypothesis of small generalized coordinates (β_i), the previous shape function could be considered the basis for the asymptotic approach solution.

As mentioned, the literature reveals that the approximate sloshing solution (or third-order solution) is limited to single mode resonance cases and therefore not accurate to represent, as the amplitude increases, the non-linear effects that may influence the higher peaks and smaller troughs in the surface elevation [5].

Furthermore the variation of the boundary conditions (BCs) during the motion may be considered one of main non-linearities. These BCs are influenced by the geometrical profile of the free surface variable in time.

In [9] it is possible to find the most important proposed analytical theories and the relative approximate solutions, that, even if more accurate, are not able to correctly represent the non linear aspects characterizing the fluid-structure interaction.

3. Description Of the Lead-cooled Fast Reactor (LFR)

To attain the objective to develop a more sustainable nuclear technology which will make the use of nuclear energy through more efficient use of uranium resources (with recycling of Plutonium) and by the reduction of the radio toxicity of the ultimate radioactive wastes, three fast neutron Generation IV reactor concepts, namely, the Sodium Fast Reactor (SFR), the Lead cooled Fast Reactor (LFR) and the Gas cooled Fast Reactor (GFR) are being taken into account in Europe.
Among the promising reactor technologies being considered by the Generation IV International Forum (GIF), the Lead-cooled Fast Reactor (LFR) has been identified as a system with great potential to meet needs for both remote sites and central power stations.
In this study the European Lead cooled SYstem (ELSY) configuration was considered (although the ALFRED one [10] should represent the upgrading of the ELSY system [11-12-13]).
The ELSY reactor is a 600 MWe/1500 MWth pool-type reactor that uses pure lead as primary coolant in forced circulation by means of 8 pumps placed in the hot collector (Fig. 5). The pool-type configuration was chosen instead of the loop-type one for the possibility to contain within the main vessel all the primary coolant components with positive effects in terms of safety and dimension reduction.

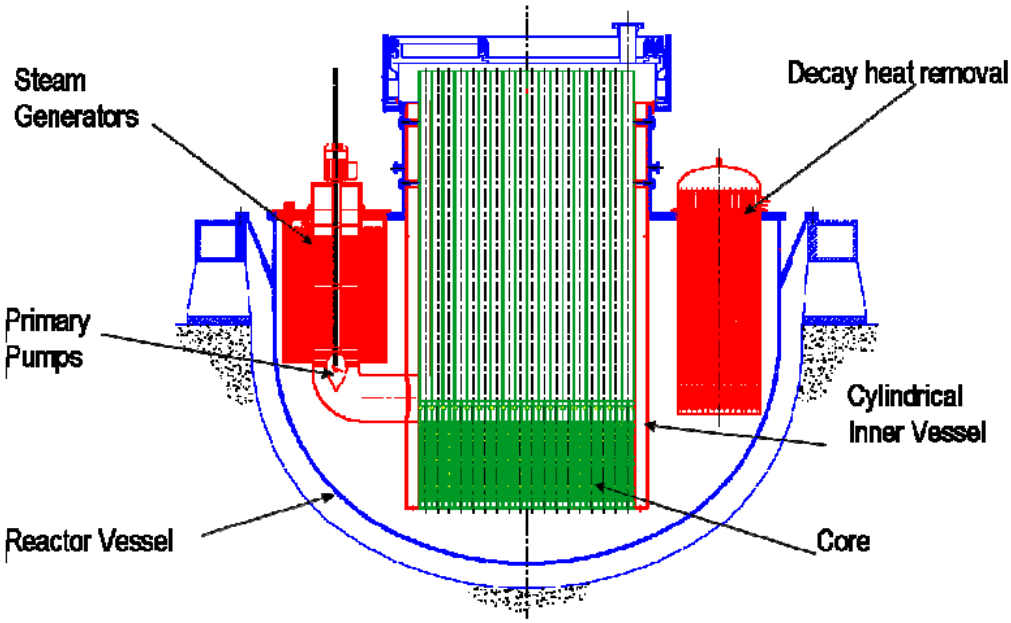

Figure 5 – ELSY Reactor Vessel and Support assembly

ELSY reactor type is characterized by the reduction and simplification of the primary system: an example is given by the arrangement of steam generators that are located in the upper part of the reactor vessel to enhance natural circulation in case of loss of primary pumps.

The hot primary coolant is transferred from the centre hot duct of the core to the steam generators; the thermal power is, in turn, removed by 8 spiral-bound tube bundle steam generators and transferred to the secondary loop.

The reactor vessel (RV) has a fixed roof with an annular central part to accommodate the extension of cylindrical inner vessel and contains two water-air decay heat removal (DHR) systems and also 8 internal primary pumps coaxially assembled in the steam generators (SG), as it is shown in Fig. 6. The reactor roof ensures component support, reactor cover gas containment and biological protection.

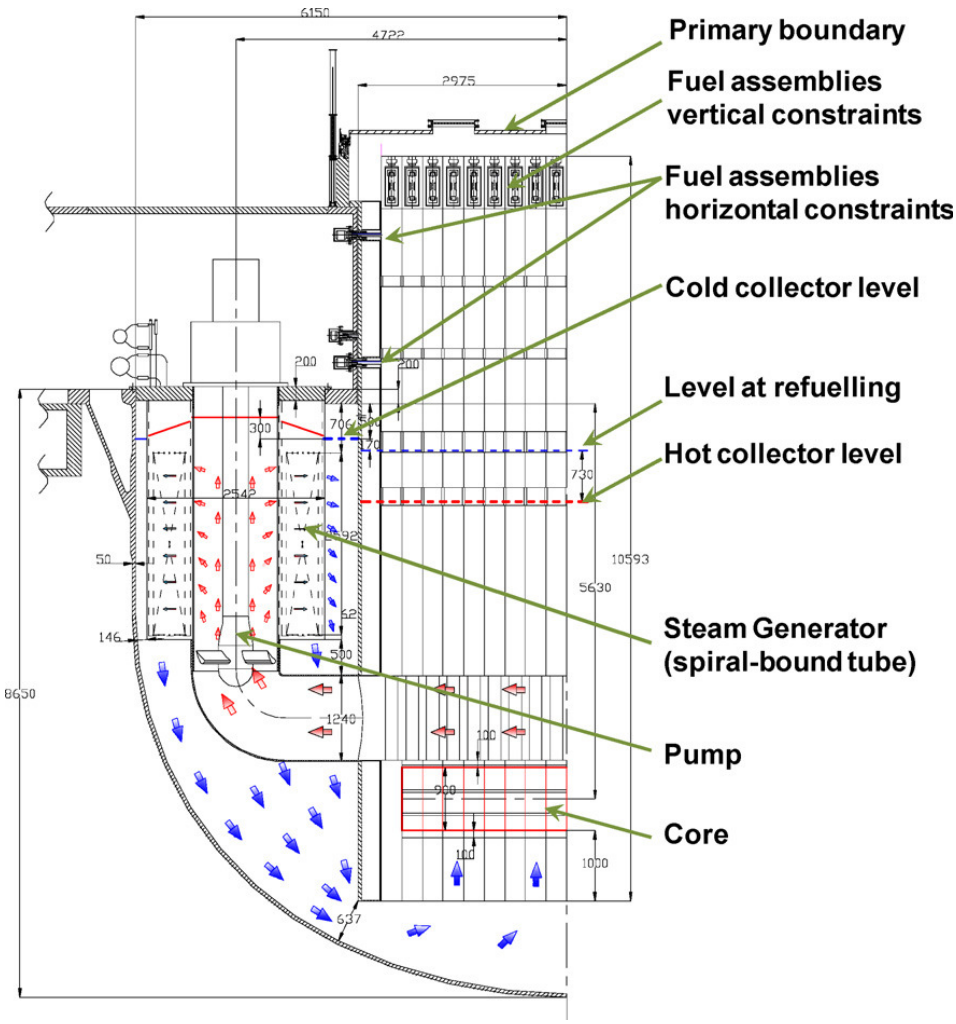

Figure 6 – ELSY reactor vessel vertical section

The upper part is divided into two branches by a "Y" junction: the conical skirt, that supports the whole weight of RV and its internal components, and the cylindrical one, which only supports the reactor roof. The reactor building (RB) layout (Figs. 7) is assumed to have the following main design dimensions:

- External diameter: ∅= 44 m;
- Height: H = 48.5 m;

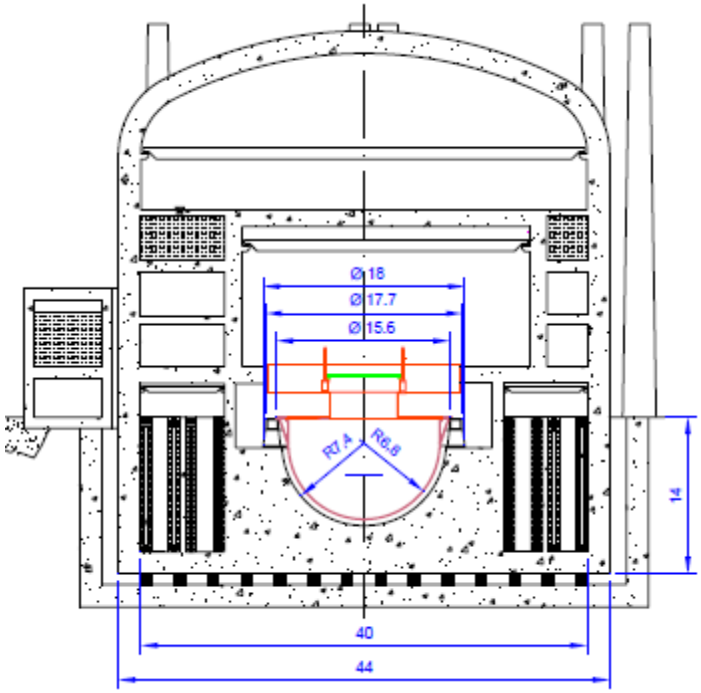

(a)

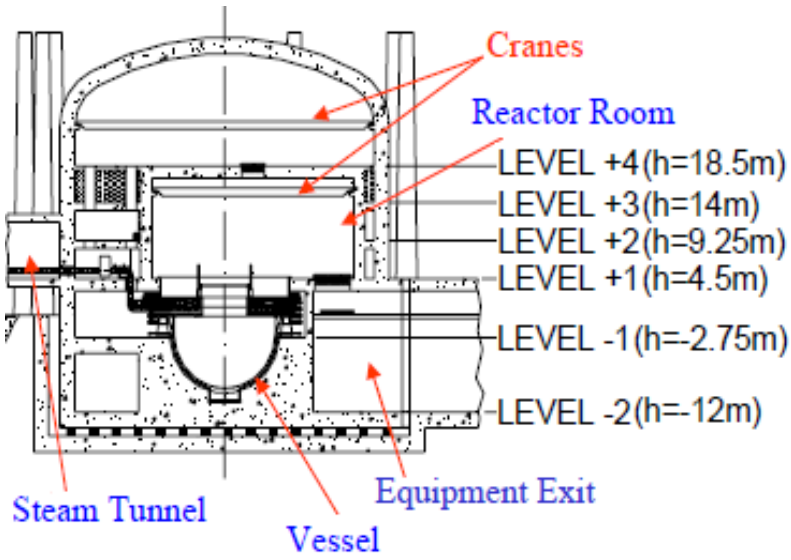

(b)

Figures 7 - Reactor Building main dimension (a) and general configuration (b)

The reasons for such a large diameter of the reactor building are due to the large vessel dimensions, about 18 m (related of course to the pool type integral configuration), to the reactor room, the decay heat removal system pools, etc. Moreover the reactor building has been considered to be fixed at ground level.

The use of a compact solution for the RV and a simplified and innovative primary circuit, characterized by the possibility to remove all the internals, are useful to mitigate the possibly adverse effect of the high density of lead [14]. The reactor vessel, the skirt and the SG outlet are made of SA 240 316LN, while the SG support box and base plate are made of SA 516 Gr 70 carbon steel.

4. Preliminary BDBE Analysis

The analysis of the liquid sloshing and fluid structure interaction are of meaningful importance because of the need to evaluate the safety margin of the reactor structures, systems and components.

As already mentioned the heavy metal primary coolant, that characterize LFR, responds to dynamic motions, particularly to the seismic one, and when the excitation has a frequency near the natural one of the container system, rather "violent" waves can form and impact into the tank walls. In particular the impact of waves (hydrodynamic pressure and impact force) on the RV walls and on its internal structure could result in a serious concern, from a structural point of view, because of the high density of lead. The basic problem of liquid sloshing involves the estimation of hydrodynamic pressure distribution, forces, moments and natural frequencies of the free-liquid surface. These parameters have a direct effect on the performance (structural integrity) of the considered reactor structures systems and components. It is worthy to note that, generally, the hydrodynamic pressure of liquids in moving rigid containers has two distinct components:

1) the first component or "impulsive", directly proportional to the acceleration of the tank;

2) the second one or "convective" pressure representing the free-surface-liquid motion.

The FSI induced by an earthquake event was evaluated considering the reactor building foundation was provided of efficient seismic isolation devices in order to mitigate the propagation of the seismic dynamic loadings.

In the analyzed case, sloshing becomes a transient problem and its solution provides the fluid motion, the hydrodynamic pressures and the stress values in the reactor pressure and internals.

To the purpose the effect of the adjacent walls and coupling between internal primary coolant and vessel are considered.

Besides it must be pointed out that a realistic prediction of seismic related sloshing phenomenon is made particularly difficult by the FSI non linear nature, characterized and influenced by a large number of parameters, such as the complex geometry of the reactor vessel and internals, the liquid variable height (along the free surface and during the seismic motion), the material properties (not elastic behaviour), etc.

In consideration of these weak points/difficulties, the design philosophy adopted for the evaluation of the seismic capability of the considered LMR is a deterministic approach, based on a numerical evaluation (and non linear analyses), by means of finite element method, capable to simulate and evaluate the effects induced by the propagation of the seismic waves on the mainly relevant structure (in terms of seismic demand parameter) and to represent adequately the fluid-structure interaction (FSI) and sloshing phenomena.
At this early stage of study it was considered an isolation frequency far from the one of liquid in order to avoid possible coupling, whose occurrence may amplify the effects of FSI. The soil structure influence has not been considered in this study. Future further developments should be necessary to evaluate more in depth the influence of isolators as well as that one of the soil-structure interaction.

4.1 Numerical Approach

To evaluate the structural performance of ELSY reactor subjected to a BDBE, a conservative analysis has been carried out: due to the fact that only the cylindrical inner vessel ("core region") has been considered the lead mass inside the vessel was over-estimated. To the intent the Time History and the Substructure approaches were applied. Rather complex models (Figures 8 a and b) representative of the RB and of the main and mutually interacting reactor components were set up and implemented.
The considered and modelled structures, systems and components are the followings:

- the Reactor Building;
- the Safety Vessel with its annular box structure;
- the Reactor Vessel and its support system;
- the molten primary coolant: pure lead;
- the cover gas: argon.

In the present study the T91 martensitic steel, also pre-selected for the design of EFIT and XT-ADS European facilities, has been considered.

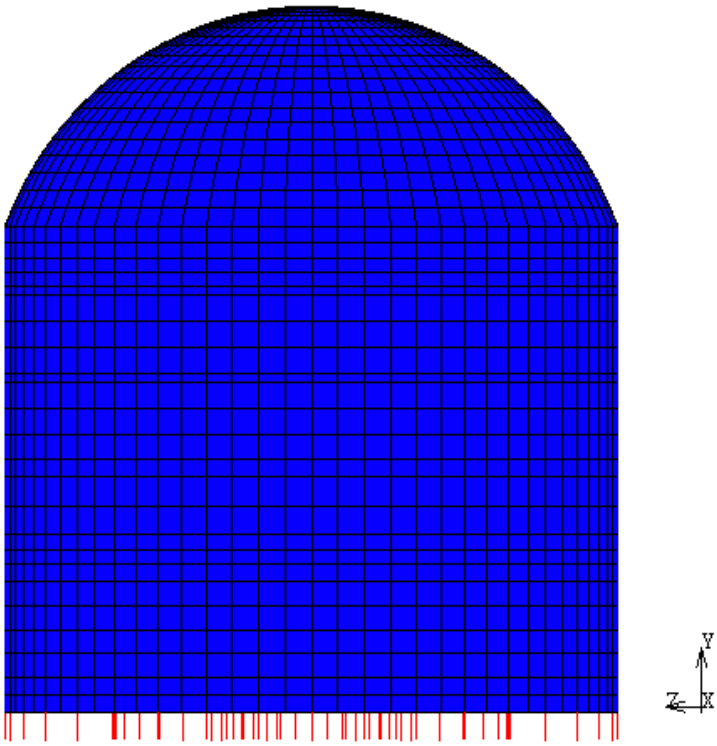

(a)

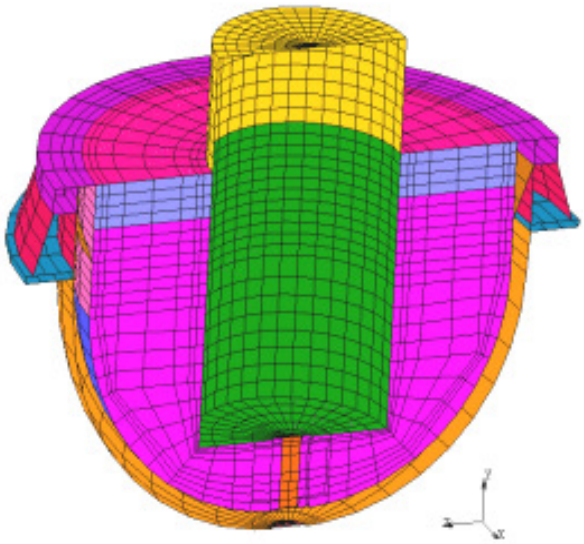

(b)

Figures 8 - Reactor Building (a) and RV (b) preliminary models

To correctly represent the behaviour of the considered LFR reactor the experimental mechanical properties of T91 steel, as shown in Figure 9, were assumed as input in the implemented model [7]. In Fig. 9 it is, indeed, represented the "*..engineering stress-strain curves obtained with T91 specimens, after standard heat treatment, after 4000 h pre-exposure to LBE at 450°C…*" as quoted in NEA handbook [15].

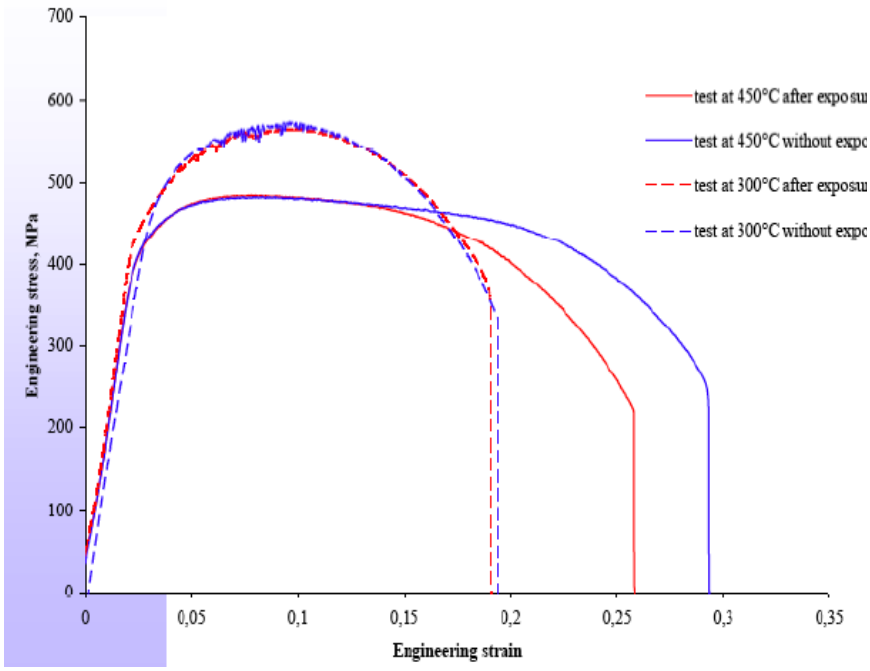

Figure 9 - Experimental stress-strain curves for T91 [15]

In this paper seismic related fluid-structure interaction problem was investigated by means of an appropriate dynamic finite element code (MSC©Dytran [16]) implementing the Lagrangean-Eulerian Algorithm (ALE) which allowed to solve the equations of the fluid motion at each point and time step.

Moreover the interacting materials (fluid and structures) were modelled through Eulerian and Lagrangian meshes: Eulerian elements were chosen to simulate the primary coolant and the cover gas behaviours while Lagrangean elements to represent the reactor vessel and its internals structures.

The preliminary analysis was carried out in two step: the first one allowed to evaluate the influence of the dynamic loads propagating through the isolated reactor building while the second

one allowed to analyze the structural effects induced by the ground motion on the RV and its main internal components.

The isolation may be obtained using an iso-elastic approach (isolators were represented by means of springs coupled to dashpots capable to simulate the behaviour of high damping rubber bearing components), and assuming an isolator's frequency equal to 0.5 Hz.

In order to understand the dynamic response of the building and to evaluate its dynamic characteristics the same input Acceleration Time Histories (ATHs) were applied at the base of the foundation of the isolated RB.

The input acceleration data were elaborated according to the updated Regulatory Guide US NRC 1.60 and 1.92, considering a 5% of critical damping value. They were represented in Figure 10 by means of three artificial time histories components, two along the horizontal direction (Ax and Az) and one along the vertical one (Avert), compatible with the given free-field spectra which represent the assumed BDBE at a hypothetical embedment in stiff rock.

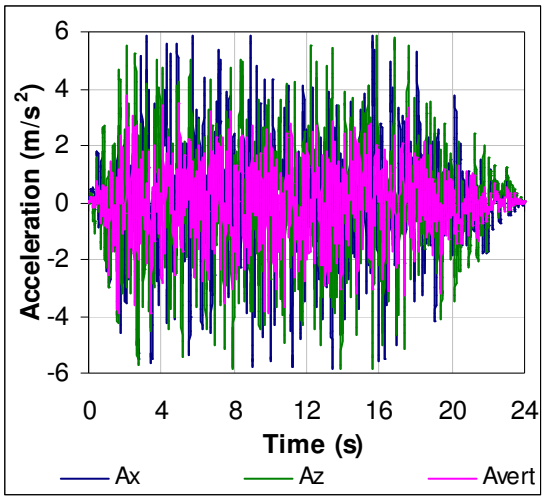

Figure 10 - Input Acceleration Time Histories

5. BDBE analysis results and discussion

Before the evaluation of the effects due to the dynamic forces exerted/induced by the fluid motion coupled to the FSI on to the RV structures, the influence of the dynamic loads propagating through the isolated reactor building was carried out.

Preliminarily a modal analysis was performed to check the consistency between the isolated RB structure and the isolation system and confirm that the considered RB structure behave as a "rigid body". Subsequently suitable seismic transient non linear analyses were carried out in order to calculate the acceleration values propagated up to the anchorage of the safety vessel.

Overviews of the obtained acceleration values allowed also to confirm the favourable effects of the isolation system in mitigating the propagation of the accelerations inside and along the RB containment structure (Fig. 11): reduction of about 40-50%.

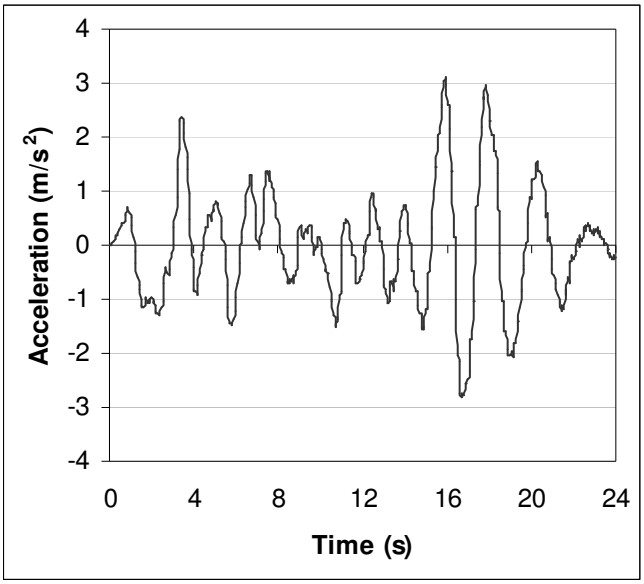

Figure 11 - Horizontal acceleration at the SV anchorage

It is important to highlight that due to the reactor vessel height (may be considered as an "elevated structure") and the large mass of the lead inside the reactor vessel, the sloshing phenomenon may become very important because it might produce stresses exceeding the allowable limits in localized parts of the reactor internals components and, therefore, locally impair their integrity.

In the performed analyses, only the transmitted horizontal acceleration was used as input in the RV substructure (previous shown in Figure 8 b) in order to analyze the structural effects induced by the ground motion on the RV and its main internal components, taking into account the effects of the moving lead.
The main assumptions made were:

- Fluid has an elastic, linear, isotropic behaviour;
- Lead is modelled as Eulerian fluid
- RV, SV and internal structures behaviour was linear elastic perfectly plastic as well as isotropic;
- Fluid and structure may exchange mechanical energy at the fluid-structure interface;
- The fluid-structure coupling is treated using the Arbitrary Lagrangean Eulerian;
- Argon is modelled as an ideal gas;
- BDBE input motion was represented through the horizontal velocity (along the x axis direction) applied at the SV.

The coupling effects between the fluid and the surrounding structures was calculated by means of the Arbitrary Lagrangean Eulerian coupling algorithm.
This algorithm allows to define an interface surface, that also serves as a boundary for the flowing Eulerian material during the analysis. Moreover, as already mentioned, the carried out simulations may be considered rather conservative because in the performed analyses the RV model did not include all internals structures and components, therefore the obtained results refer to a more conservative evaluation of the fluid-structure interaction between the reactor vessel and lead coolant and sloshing effects.
The preliminary results (structural effects and consequences) obtained from the carried out seismic analyses, are presented in the following figures and discussed in order to highlight the importance of the fluid-structure interaction phenomenon in terms of stress intensity distribution inside the RV and internal components as well as of the fluid movement along/inside the vessel (due to the impulsive and convective-sloshing components of the fluid motion).
It was observed that the elevation of waves, about 10 cm was not sufficient to impact the roof.

Lead motion coupled to the propagation of seismic wave resulted in a stress intensity distribution that could impair the structures capability to withstand the related dynamic loads on the RV and internal components. Moreover it was observed that the inner cylindrical vessel (which allows to enclose and sustain the core) structure seemed to influence the fluid waves motion by fragmenting the fluid wave.

The fragmentation allowed also to avoid that a more extensive lead mass could impact the roof: subsequently the impact force is reduced as well as the risk of structural damage.

Another aspect that determined a further reduction of the impact force is the drug of the argon gas into the lead during the fluid motion due to the resulted variation of lead density (at 6 s, as an example), clearly visible in Figure 12 around the yellow interface.

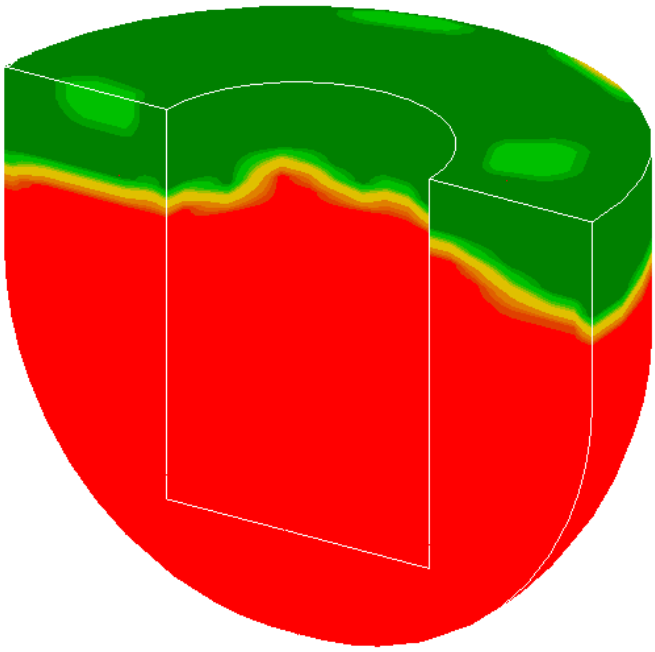

Figure 12 - Lead density variation behavior

Figure 13 shows the hydrodynamic pressure distribution into the reactor vessel due to the lead motion; it highlights that the mean pressure values range from about 1 to 2.5 MPa: this variation seemed to depend on the level of seismic motion intensity.

Moreover the maximum pressure value (about 6 MPa at $t \approx 4$ s) occurred on the bottom of the reactor vessel and of the inner vessel. Although this high value, the seismic buckling of the

reactor vessel and its internals is prevented, for the reason that the seismic pressure greatly increases as the coolant depth becomes deeper.

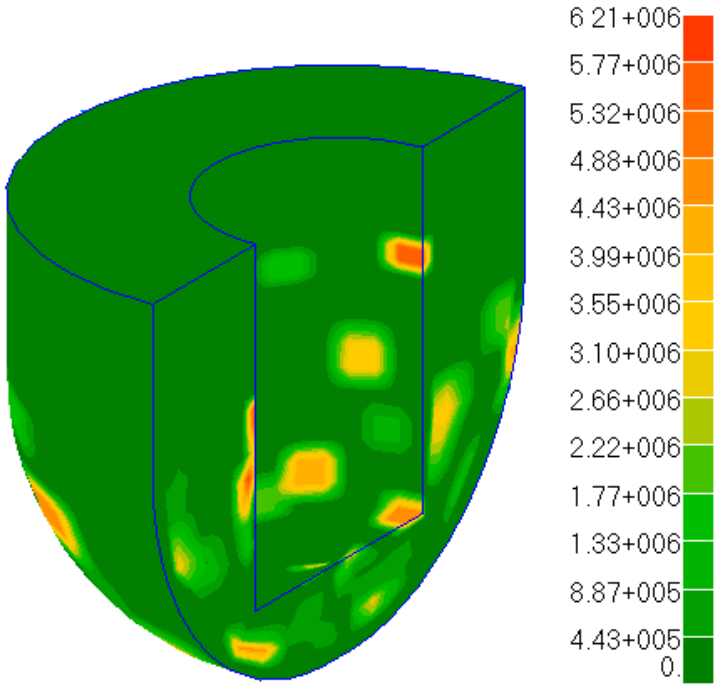

Figure 13 - Pressure distribution inside the RV at t ≈ 4 s

The progressive lead motion and, in particular, the formation and impact of lead waves (hydrodynamic pressure and the fluid movement characteristics) seemed to determine high Von Mises stress values (Fig. 14) in the reactor vessel and its internals walls.

The maximum stress values resulted about 210 MPa and localized in correspondence of the inner cylindrical vessel walls. Moreover in Figure 15 it is represented the calculated and smoothed behaviour of Von Mises stress; this latter is much more important from a structural point of view because does not contain the vibration component.

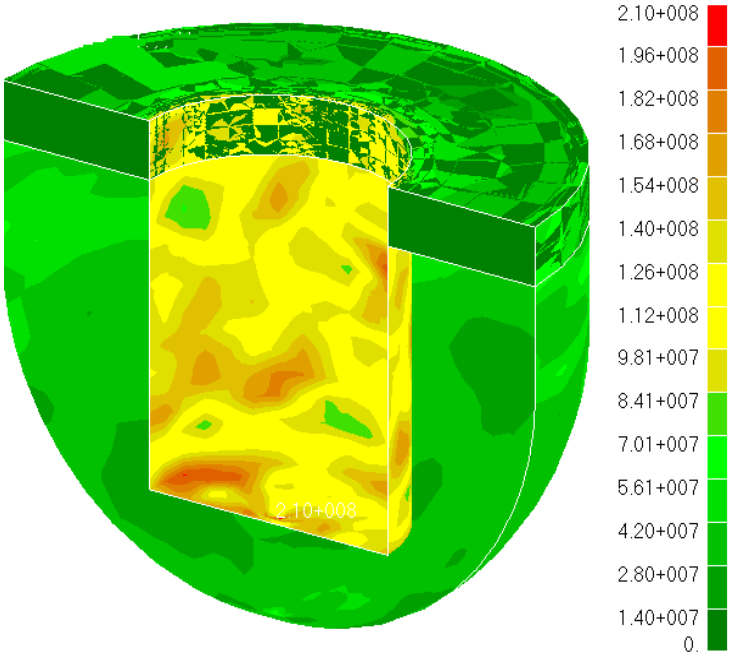

Figure 14 - Von Mises stress distribution inside RV

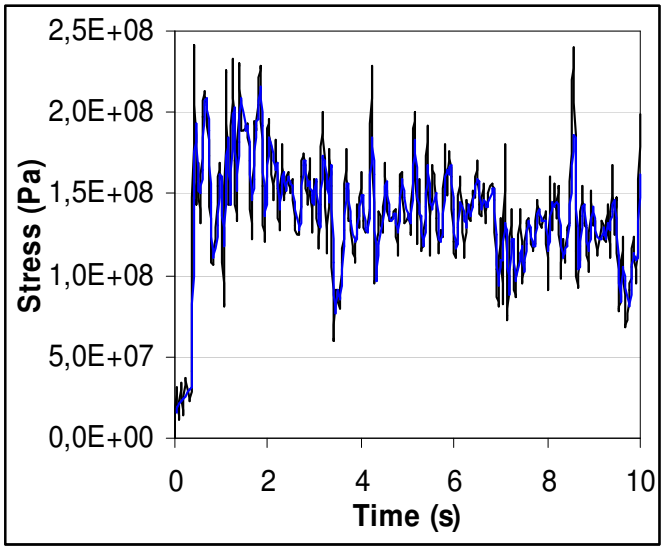

Figure 15 - Von Mises stress behaviour at the inner vessel wall

It is important also to note that the stress values calculated at the inner vessel wall, probably induced by the fluid movement and/or fluid wave impact on the RV structures, were anyway not

sufficient to determine the plasticization of the RV and inner vessel wall thickness and therefore to impair their structural integrity in view of the ASME code rules.

In addition it is important to consider that in the performed analyses the fluid is assumed to fill a rather more extensive region inside the vessel, therefore the obtained stresses might be greater than the real ones.

6. Conclusion

In this report the results of preliminary seismic analyses are discussed, as obtained using the Time History method coupled to the substructure approach that allowed to study separately a hypothetical ELSY containment building and the reactor vessel with the inner cylindrical vessel.
To perform the analyses, appropriate Substructure approach with 3-D FEM models, representative of the isolated reactor building and of the safety and reactor vessels, etc., were set up in order to evaluate the seismic response of the structures and internal components that are particularly sensitive to the seismic events due to the large coolant mass in LFR.
In the carried out preliminary analyses, the effects of the coupling between the fluid and the reactor vessel structure both in terms of the stresses level and distribution were presented.
The input acceleration may determine the arise of fluid sloshing waves that may induce relevant hydrodynamic pressures on the RV and internal components walls which, in turn, generate a corresponding stress intensity distribution.
The obtained preliminary numerical results, for implemented models, highlighted that:

1) the maximum Von Mises stress values seem to be located at the bottom of the inner cylindrical vessel;
2) the obtained RV internal displacements, due to the deformation induced by the fluid motion, are rather large and highlight a criticality in the reactor internals design, while the displacement of the SV and RV ones are negligible;
3) The sloshing analyses performed up to now have highlighted the need to improve the structural design of primary system components, however with no significant modification of their functional geometry or layout within the main vessel;
4) The fluid-structure interaction effects have been thus proved of meaningful importance in the dynamic behaviour of the reactor pressure vessel with heavy coolant fluid.

The set up model, even if used to simulate the fluid-structure interaction, includes some relevant internal components; nevertheless it may be useful to further upgrade the reactor vessel and internal design.
Finally it is important to note that future further developments should be necessary to evaluate more in depth the influence of isolators (considering also frequency not far from the liquid one in

order to evaluate the effects of possible isolators- FSI coupling) as well as that one of the soil-structure interaction, that at this preliminary stage was not considered.

7. References

1. IAEA, “Fundamental Safety Principles”, IAEA Safety Standards Series No. SF-1, IAEA, Vienna (2006).
2. O.M. Faltinsen, “A nonlinear theory of sloshing in rectangular tanks”, J. Ship Res. 18 (4) (1974) 224–241.
3. O.M. Faltinsen, O.F. Rognebakke, I.A. Lukovsky, A.N. Timokha, “Multidimensional modal analysis of nonlinear sloshing in a rectangular tank with finite water depth”, J. Fluid Mech. 407 (2000) 201–234.
4. O.M. Faltinsen, O.F. Rognebakke, A.N. Timokha, “Resonant three-dimensional nonlinear sloshing in a square-base basin”, J. Fluid Mech. 487 (2003) 1-42.
5. J. B. Frandsen, “Sloshing motions in excited tanks”, Journal of Computational Physics 196 (2004) 53–87.
6. Standards ASCE 4-98, “Seismic Analysis of Safety-Related Nuclear Structures”, ASCE, 2000.
7. F. Axisa, J. Antunes, “Modelling of Mechanical Systems: Fluid-Structure Interaction”, Butterworth-Heinemann editor, 2009.
8. H Hernandez-Barrios et al., “Nonlinear sloshing response of cylindrical tanks subjected to earthquake ground motion”; Engineering Structures 29, 3364–3376, 2007.
9. R. A. Ibrahim, “Liquid Sloshing Dynamics”, Cambridge University Press, 2005.
10. Mansani L.,”System Configuration for LFR”, *International Workshop on LMFRs, Aix-En Provence, October 4-7, 2011.*
11. Cinotti L., Smith C. F., Sienicki J. J., Ait Abderrahim H., et al., “The potential of the LFR and the ELSY Project”, RGN, n° 4, Juillet-Aout 2007.
12. Cinotti L., Smith Craig F., Sekimoto H., “Lead-cooled Fast Reactor (LFR) Overview and perspectives”, Proceedings of the GIF Symposium 2009, Paris, France Sept. 9-10, 2009.
13. Alemberti A., Carlsson J., et. al. “European lead fast reactor – ELSY”, Nuclear engineering and design, vol. 241, 2011, 3470-3480.
14. Mourogov V., Juhn P. E., Kupitz J., Rineiskii A. “Liquid-metal-cooled-fast reactor (LMFR) development and IAEA activities”. *Energy*, vol. 23, Issues 7-8, 1998, 637-648.
15. NEA\AEN, ”Handbook on Lead-bismuth Eutectic Alloy and Lead Properties, Materials Compatibility, Thermal-hydraulics and Technologies”, *OECD Publications*, 2007.

8. Curricula of the research group members

The research group of the CIRTEN-University of Pisa is led by Prof. G. Forasassi and consists of: Dr. R. Lo Frano.

The prof. G. Forasassi is full professor of Nuclear Plants, of Structural and Mechanical Engineering Design and of Design of Complex Plant.

The research activity is documented in over 150 publications (http://arp.unipi.it/listedoc.php?lista=ALL&ide=1190&ord=C) focused in particular on the study of the safety and design of components of complex systems and nuclear, the safe transport and storage of radioactive materials etc.

The prof. Forasassi, former Director of the Pisa University and Vice-Chairman DIMNP-AIN, is currently President of the National Consortium CIRTEN (Interuniversity Consortium for Nuclear Technological Research) which is participated by the University of Pisa since its foundation in 1994, together with the Polytechnic of Milan and Turin and the University of Padova, Palermo and Rome 1-La Sapienza and since 2010 by the University of Bologna.

- Dr. Rosa Lo Frano is junior researcher at the University of Pisa.

Since 2007 he has been/is assistant-professor courses: Techniques of construction machinery, chemical and nuclear design of the plant complex. The research activity concerning the study of security issues and design of nuclear facilities, the safe transport and storage of radioactive materials, is documented by more than 50 publications in international journals and conference proceedings of the field (http:// arp.unipi.it / listedoc.php? list = ALL & ide = 11443 & ord = C).